BENDER +WIRTH

# LED HALTER SERIE 430 + 630

# LED HOLDER SERIES 430 + 630

## Katalog der Standardhalter für **Nichia** COBs

## Catalogue of standard holders for **Nichia** COBs

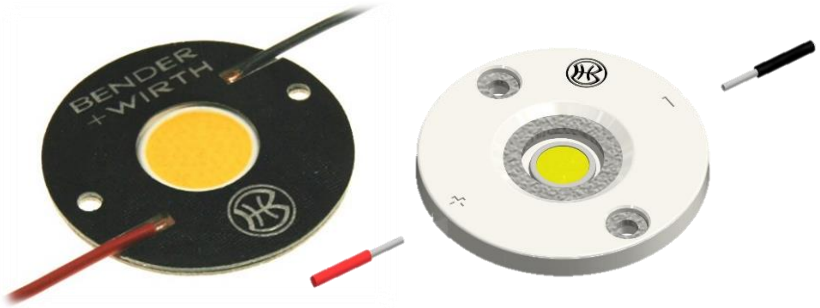


**UNSER** KONZEPT
FÜR **IHRE**
INDIVIDUELLE
LED MONTAGE

**OUR** CONCEPT
FOR **YOUR**
INDIVIDUAL
LED MOUNTING

NICHIA

# INHALTSVERZEICHNIS
## CONTENT

BENDER +WIRTH


| Hersteller / Supplier | Optik / Optics | | Halter Typ / holder type | Seite / Page |
|---|---|---|---|---|
| **COB Halter Hybrid 630 / COB Holder Hybrid 630** | | | | |
| **Lowprofile** | | | *6xxz LowProfile* | 4 |
| **Bayonet50** | *Gaggione LLRx7M / Hadar70, Herculux Kirin D50, Ledil 50mm "B"- Optics* | | *6xxz Bayonet50* | 6 |
| **Bayonet50G** | *Gaggione LLC66 / LLC79 / Hadar70 / Sirius50 / Ufo* | | *6xxz Bayonet50G* | 8 |
| **Hekla** | *Ledil Hekla System* | | *6xxz Hekla* | 10 |
| **Bayonet35** | *Herculux Kirin D35, Ledil Amy-B / Yasmeen-B* | | *6xxz Bayonet35* | 13 |
| **3Hook** | *Carclo S1, Ledil Angela / Molly / Ronda* | | *6xxz 3Hook* | 15 |
| **Lena** | *Ledil Lena* | | *6xxz Lena* | 17 |
| **RJR** | *Bartenbach RJR* | | *6xxz RJR* | 19 |
| **Nata** | *Nata M30 and M39* | | *6xxz Nata M3x* | 21 |
| **LED Halter 430 / LED Holder 430** | | | | |
| **Basishalter / Standard holders** | | | *4xx Typ xx* | 23 |
| **Almeco** | *A1 Fixing System* | *108n/w, DKL97/194, SQ120* | *4xx Typ A1* | 24 |
| **Bartenbach** | *RJR* | | *4xx Typ Z1* | 27 |
| **Carclo** | *26,5mm lense* | | *4xx Typ C2 / C3* | 28 |
| | *Newton* | | *4xx Typ C1* | 29 |
| **Fraen** | *FNL-N1-75* | | *4xx Typ F1* | 30 |
| **Gaggione** | *LLR01N* | | *4xx Typ G1* | 31 |
| | *LLR05N* | | *4xx Typ G2* | 32 |
| | *LLC 05 / 15 / 25* | | *4xx Typ K3* | 33 |
| | *LLC66 / LLC79* | | *4xx Typ Z1* | 34 |
| **Jordan** | *Serie 75* | | *4xx Typ Z1* | 36 |
| **Khatod** | *Cosmo* | | *4xx Typ K3 / Z1* | 37 |
| | *Easy, Easy Assymetric* | | *4xx Typ Z2 / Z3* | 39 |
| | *PL 50 SIL* | | *4xx Typ K2* | 42 |
| | *SiO 3 / SiO 3 Junior* | | *4xx Typ K1* | 43 |
| | *SIR 50* | | *4xx Typ K3* | 44 |
| **Ledil** | *2x2MX* | | *4xx Typ 2x2MX HV* | 45 |
| | *Clamp System* | *Angela, Angelette, Angelina, Molly, Ronda* | *4xx Typ L1 / L2 / L3* | 47 |
| | *Hekla System* | *Barbara-G2, Mirella-G2, Brooke-G2, Carmen, Ronda, Winnie, Zorya* | *4xx Typ L8* | 49 |
| | *Lena* | | *4xx Typ L1 / L2 / L3* | 51 |
| | *PF-System* | *Barbara, Mirella* | *4xx Typ L1 / L2* | 52 |
| | *Saga* | | *4xx Typ L6* | 54 |
| | *Stella L1* | *Stella A* | *4xx Typ L1* | 55 |
| | *Stella L4* | *Stella HB, HB WWW, Fresnel,RS, G2-VSM* | *4xx Typ L4* | 56 |
| | *Stella Z1* | *Stella T4, VSM, DWC2, G2-T2, G2-T3, G2-T4* | *4xx Typ Z1* | 57 |
| | *Winnie* | | *4xx Typ L5* | 58 |
| | *Zorya* | | *4xx Typ L7* | 59 |
| **Ledlink** | *CEW / CHQ series* | | *4xx Typ LL1* | 60 |
| **Nata** | *M30* | | *4xx Typ N1* | 61 |
| **Mechatronix** | *High Bay Cooler* | | *4xx Typ M1 / M2* | 62 |
| **Zhaga** | *Book 3* | | *4xx Typ Z1* | 63 |

**Ist Ihre COB oder die gewünschte Bauform nicht aufgeführt?**
**Bitte sprechen Sie uns an.**
**If your COB or requested shape is not listed, please contact us.**

**Die dargestellten Halter / Reflektor Kombinationen zeigen lediglich die technische Machbarkeit. Technische Daten und Montagehinweise sind in unserem Technical Guide LED Halter Serie 430 und 630 aufgeführt.**
**Die Kabelaustritte an den Haltern sind abhängig vom verwendeten COB.**
**Optische Daten und Datenblätter gibt es auf Anfrage nach Verfügbarkeit beim Reflektorhersteller.**
**The illustrated holder / reflector combinations only show the technical feasibility.**
**Technical data and mounting instructions are listed in our Technical Guide LED holder series 430 and 630.**
**The cable exits of the holders are pending on the COB.**
**Optical data and datasheets are available upon request and availability by the reflector manufacturer.**

**Die Informationen in diesem Dokument sind ohne Gewähr und können ohne Vorankündigung geändert werden.**
**The information in this document is provided without liability and subject to change without notice.**

# COB HALTER HYBRID
## COB HOLDER HYBRID

# 630

BENDER +WIRTH

| | | |
|---|---|---|
| **Gehäusetyp:** Housing: | **LowProfile** | **Größe / Size : 44/50 mm**<br>**Höhe / Height : 3,4 mm** |
| **Beispiele für passende Optiken** examples of suitable optics | **LEDiL STELLA-T4, -VSM, -DWC2, -G2-T2, -G2-T3, -G2-T4**<br>**KHATOD COSMO 70/90mm** | |

633a/47590 ( 2 : 1 ) Version 1: 633x, 634x, 637x, 638x, 641x, 652x, 660x

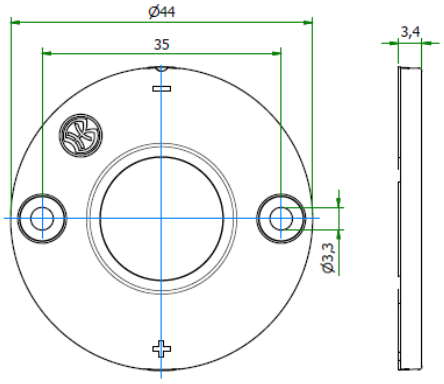


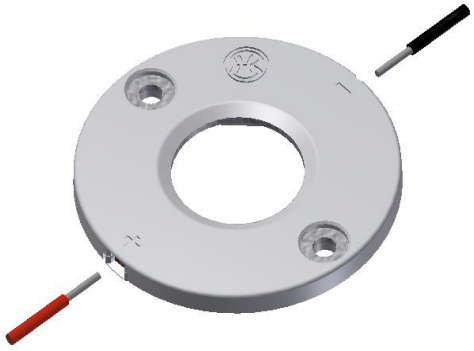

631a/47584 ( 2 : 1 ) Version 2: 631x, 632x, 639x, 663x

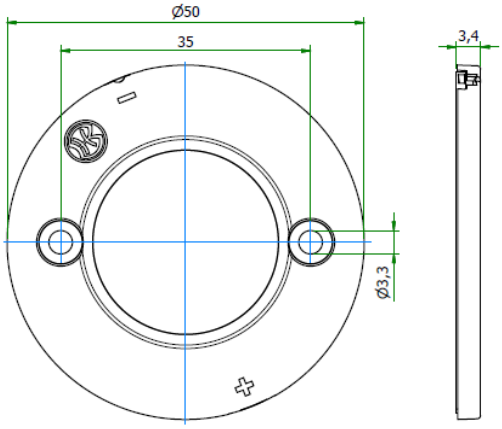

| | | |
|---|---|---|
| **Bemessungsspannung**<br>rated voltage | **Standard 250V DC**<br>**optional 450V DC** | **Zulässige COB Abmessungen**<br>Permissible COB dimensions |
| **Bemessungsstrom**<br>rated current | **5 A** | 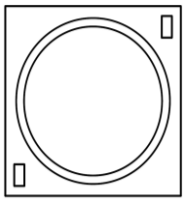 **siehe Einzeldatenblätter im Online Katalog**<br>see data sheets at our web catalogue |
| **Bemessungstemperatur**<br>rated operating temperature | **T 120** | |
| **Befestigung**<br>fixing | **2 Schrauben M3**<br>2 screws M3 | |
| **max. Drehmonent**<br>max. torque | **0,5 Nm** | |
| **Material des Halters**<br>material of the holder | **PBT / Mikanit**<br>PBT / Mica | **Zertifikate / certificates** |
| **Kontaktmaterial**<br>contactmaterial | **CuSn**<br>CuSn | **Ausweis-Nr.** **File E4729** |

**Weitere technische Daten und Montagehinweise sind im Technical Guide COB Halterserie 630 enthalten.**
Further technical details and mounting instructions are part of the Technical Guide COB holder series 630.

| Teilumhüllter Halter für folgende COBs / unenclosed holder for the following COBs: | | | |
|---|---|---|---|
| **Hersteller** supplier | **COB Typ** COB Type | **Teile-Nr.** part no. | **Haltervariante** variant of holder |
| Nichia | NV..S007Z / NF..T012B | **47455** | COB Holder Hybrid 652a LowProfile |
| Nichia | NF..S024B / NT..S024B | **47455** | COB Holder Hybrid 652a LowProfile |
| Nichia | NJ..S024Z | **47455** | COB Holder Hybrid 652a LowProfile |
| Nichia | NV..L016Z / NV..L024Z | **47465** | COB Holder Hybrid 638a LowProfile |
| Nichia | NF..L036B / NF..L048B | **47465** | COB Holder Hybrid 638a LowProfile |
| Nichia | NF..L060B | **47465** | COB Holder Hybrid 638a LowProfile |
| Nichia | NV..J048Z / NF..J108B | **47953** | COB Holder Hybrid 663a LowProfile |
| Nichia | NF..J130B | **47953** | COB Holder Hybrid 663a LowProfile |

# COB HALTER HYBRID
## COB HOLDER HYBRID

# 630

BENDER +WIRTH

| | | |
|---|---|---|
| **Gehäusetyp:** Housing: | **Bayonet50** | **Größe / Size : 50 mm**<br>**Höhe / Height : 4,9 mm** |

| | |
|---|---|
| **Beispiele für passende Optiken** examples of suitable optics | **LEDiL ANGELA-B, ANGELINA-B, ANGELETTE-B, ZORYA-B, ADELIA-B 50/70/110**<br>**GAGGIONE LLR07M, LLR27M, HADAR70H41***<br>**HERCULUX KIRIN HOLDER D50** |

633a/47420 ( 2 : 1 )

Version 1: 633x, 634x, 637x, 638x, 641x, 652x, 660x

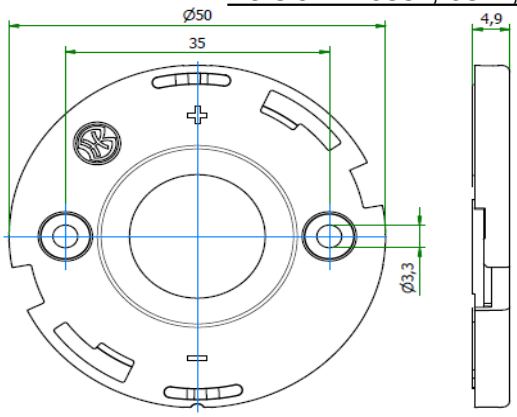

631a/47512 ( 2 : 1 )

Version 2: 631x, 632x, 639x, 663x

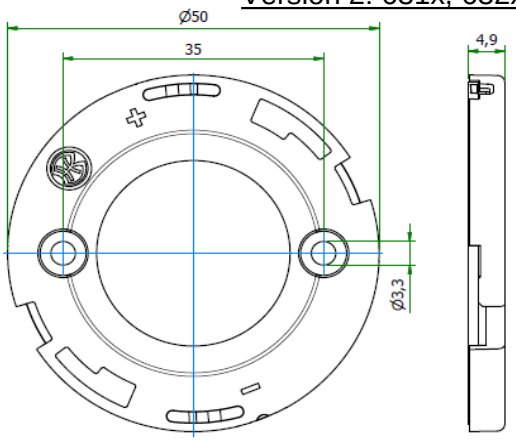

| | | |
|---|---|---|
| **Bemessungsspannung** rated voltage | **Standard 250V DC**<br>**optional 450V DC** | |
| **Bemessungsstrom** rated current | **5 A** | |
| **Bemessungstemperatur** rated operating temperature | **T 120** | |
| **Befestigung** fixing | **2 Schrauben M3**<br>2 screws M3 | |
| **max. Drehmonent** max. torque | **0,5 Nm** | |
| **Material des Halters** material of the holder | **PBT / Mikanit**<br>PBT / Mica | |
| **Kontaktmaterial** contactmaterial | **CuSn**<br>CuSn | |

**Zulässige COB Abmessungen**
Permissible COB dimensions

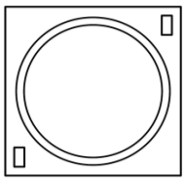

**siehe Einzeldatenblätter im Online Katalog**

see data sheets at our web catalogue

**Zertifikate / certificates**

**Ausweis-Nr.**

**File E4729**

**Weitere technische Daten und Montagehinweise sind im Technical Guide COB Halterserie 630 enthalten.**
Further technical details and mounting instructions are part of the Technical Guide COB holder series 630.

| Teilumhüllter Halter für folgende COBs / unenclosed holder for the following COBs: | | | | |
|---|---|---|---|---|
| **Hersteller** supplier | **COB Typ** COB Type | **Teile-Nr.** part no. | **Haltervariante** variant of holder | |
| Nichia | NV..S007Z / NF..T012B | **47453** | COB Holder Hybrid 652a | Bayonet50 |
| Nichia | NF..S024B / NT..S024B | **47453** | COB Holder Hybrid 652a | Bayonet50 |
| Nichia | NJ..S024Z | **47453** | COB Holder Hybrid 652a | Bayonet50 |
| Nichia | NV..L016Z / NV..L024Z | **47463** | COB Holder Hybrid 638a | Bayonet50 |
| Nichia | NF..L036B / NF..L048B | **47463** | COB Holder Hybrid 638a | Bayonet50 |
| Nichia | NF..L060B | **47463** | COB Holder Hybrid 638a | Bayonet50 |
| Nichia | NV..J048Z / NF..J108B | **47932** | COB Holder Hybrid 663a | Bayonet50 |
| Nichia | NF..J130B | **47932** | COB Holder Hybrid 663a | Bayonet50 |

# COB HALTER HYBRID
## COB HOLDER HYBRID

# 630

BENDER +WIRTH

| | | |
|---|---|---|
| **Gehäusetyp:** Housing: | **Bayonet50G** | **Größe / Size : 50 mm**<br>**Höhe / Height : 4,5 mm** |

| | |
|---|---|
| **Beispiele für passende Optiken** examples of suitable optics | **GAGGIONE HADAR70H10* (-ZOOM)**<br>**GAGGIONE LLC66 / LLC79 / SIRIUS50 ZOOM**<br>**GAGGIONE VEGA50 / UFO45 / UFO67** |

Version 1: 633x, 634x, 637x, 638x, 641x, 652x, 660x

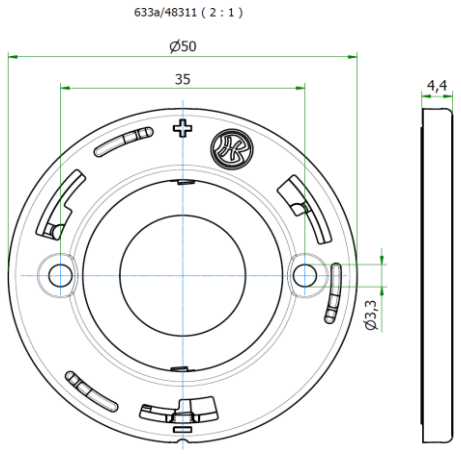

Version 2: 631x, 632x, 639x, 663x

Diese Version ist nicht umgesetzt. Bei Bedarf bitte melden Sie sich bei uns.
This version is not established. Please contact us on request.

Spezielle Schraube mit flachem Kopf erforderlich
Special flat head screw required

e.g. 48279
M3 x 8mm

| | |
|---|---|
| **Bemessungsspannung** rated voltage | **Standard 80V DC**<br>**optional 450V DC** |
| **Bemessungsstrom** rated current | **5 A** |
| **Bemessungstemperatur** rated operating temperature | **T 120** |
| **Befestigung** fixing | **2 Schrauben M3**<br>2 screws M3 |
| **max. Drehmonent** max. torque | **0,3 Nm** |
| **Material des Halters** material of the holder | **PBT / Mikanit**<br>PBT / Mica |
| **Kontaktmaterial** contactmaterial | **CuSn**<br>CuSn |

**Zulässige COB Abmessungen**
Permissible COB dimensions

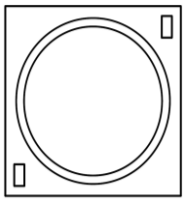

**siehe Einzeldatenblätter im Online Katalog**

see data sheets at our web catalogue

**Zertifikate / certificates**

**Ausweis-Nr.**

**File E4729**

**Weitere technische Daten und Montagehinweise sind im Technical Guide COB Halterserie 630 enthalten.**
Further technical details and mounting instructions are part of the Technical Guide COB holder series 630.

| Teilumhüllter Halter für folgende COBs / unenclosed holder for the following COBs: | | | |
|---|---|---|---|
| **Hersteller**<br>supplier | **COB Typ**<br>COB Type | **Teile-Nr.**<br>part no. | **Haltervariante**<br>variant of holder |
| Nichia | NV..S007Z / NF..T012B | **48354** | COB Holder Hybrid 652a Bayonet50G |
| Nichia | NF..S024B / NT..S024B | **48354** | COB Holder Hybrid 652a Bayonet50G |
| Nichia | NJ..S024Z | **48354** | COB Holder Hybrid 652a Bayonet50G |
| Nichia | NV..L016Z / NV..L024Z | **48350** | COB Holder Hybrid 638a Bayonet50G |
| Nichia | NF..L036B / NF..L048B | **48350** | COB Holder Hybrid 638a Bayonet50G |
| Nichia | NF..L060B | **48350** | COB Holder Hybrid 638a Bayonet50G |
| Nichia | NV..J048Z / NF..J108B | **on request** | Werkzeug fehlt / Tooling required |
| Nichia | NF..J130B | **on request** | Werkzeug fehlt / Tooling required |

# COB HALTER HYBRID
## COB HOLDER HYBRID

# 630

BENDER +WIRTH

| | | |
|---|---|---|
| **Gehäusetyp:** Housing: | **Hekla** | **Größe / Size : 44/50 mm**<br>**Höhe / Height : 5,5 mm** |

| | |
|---|---|
| **Beispiele für passende Optiken** examples of suitable optics | **LEDiL BARBARA-G2, MIRELLA-G2, BROOKE-G2, CARMEN 50/70, ZORYA-C**<br>**LEDiL ADELIA-C 50/70/110, ILONA/ILONA ZOOM, RONDA-C, WINNIE-C**<br>**LEDiL AMY/AMY ZOOM (-C) 50/70, YASMEEN/YASMEEN ZOOM (-C) 50/70** |

633a/47495 ( 2 : 1 ) Version 1: 633x, 634x, 637x, 638x, 641x, 652x, 660x

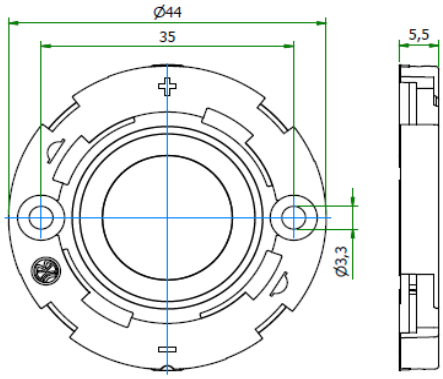


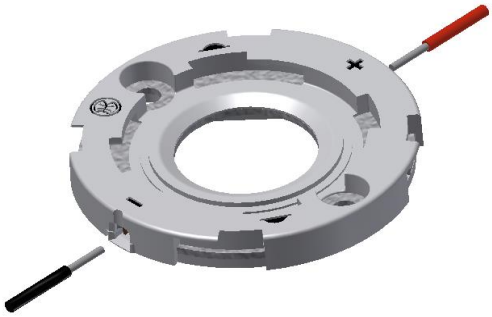

663a/48366 ( 2 : 1 ) Version 2: 631x, 632x, 639x, 663x

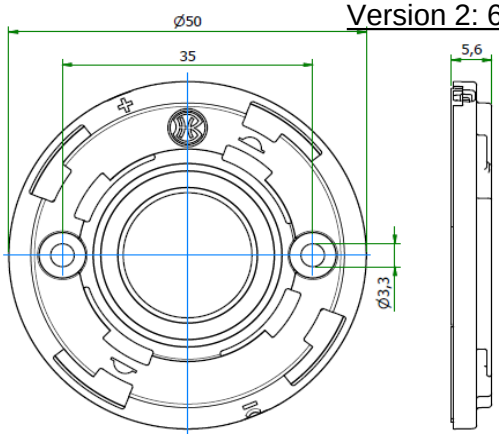

| | | |
|---|---|---|
| **Bemessungsspannung**<br>rated voltage | **Standard 250V DC**<br>**optional 450V DC** | |
| **Bemessungsstrom**<br>rated current | **5 A** | |
| **Bemessungstemperatur**<br>rated operating temperature | **T 120** | |
| **Befestigung**<br>fixing | **2 Schrauben M3**<br>2 screws M3 | |
| **max. Drehmonent**<br>max. torque | **0,5 Nm** | |
| **Material des Halters**<br>material of the holder | **PBT / Mikanit**<br>PBT / Mica | |
| **Kontaktmaterial**<br>contactmaterial | **CuSn**<br>CuSn | |

**Zulässige COB Abmessungen**
Permissible COB dimensions

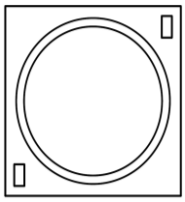

**siehe Einzeldatenblätter im Online Katalog**

see data sheets at our web catalogue

**Zertifikate /** certificates

**Ausweis-Nr.**

**File E4729**

**Weitere technische Daten und Montagehinweise sind im Technical Guide COB Halterserie 630 enthalten.**
Further technical details and mounting instructions are part of the Technical Guide COB holder series 630.

| Teilumhüllter Halter für folgende COBs / unenclosed holder for the following COBs: | | | |
|---|---|---|---|
| **Hersteller** supplier | **COB Typ** COB Type | **Teile-Nr.** part no. | **Haltervariante** variant of holder |
| Nichia | NV..S007Z / NF..T012B | **47889** | COB Holder Hybrid 652a Hekla |
| Nichia | NF..S024B / NT..S024B | **47889** | COB Holder Hybrid 652a Hekla |
| Nichia | NJ..S024Z | **47889** | COB Holder Hybrid 652a Hekla |
| Nichia | NV..L016Z / NV..L024Z | **47875** | COB Holder Hybrid 638a Hekla |
| Nichia | NF..L036B / NF..L048B | **47875** | COB Holder Hybrid 638a Hekla |
| Nichia | NF..L060B | **47875** | COB Holder Hybrid 638a Hekla |
| Nichia | NV..J048Z / NF..J108B | **48366** | COB Holder Hybrid 663a Hekla XL |
| Nichia | NF..J130B | **48366** | COB Holder Hybrid 663a Hekla XL |

# COB HALTER HYBRID
## COB HOLDER HYBRID

**630**

BENDER +WIRTH

| | | |
|---|---|---|
| **Gehäusetyp:** Housing: | **Hekla** | **Größe / Size : 44/50 mm**<br>**Höhe / Height : 5,5 mm** |
| **Beispiele für passende Optiken** examples of suitable optics | **LEDiL BARBARA-G2, MIRELLA-G2, BROOKE-G2, CARMEN 50/70, ZORYA-C**<br>**LEDiL ADELIA-C 50/70/110, ILONA/ILONA ZOOM, RONDA-C, WINNIE-C**<br>**LEDiL AMY/AMY ZOOM (-C) 50/70, YASMEEN/YASMEEN ZOOM (-C) 50/70** | |

# COB HALTER HYBRID
## COB HOLDER HYBRID

# 630

BENDER +WIRTH

| | | |
|---|---|---|
| **Gehäusetyp:** Housing: | **Bayonet35** | **Größe / Size : 32mm**<br>**Höhe / Height : 5,3 / 3,6 mm** |
| **Beispiele für passende Optiken** examples of suitable optics | **LEDiL AMY/ AMY ZOOM (-B), YASMEEN / YASMEEN ZOOM (-B)**<br>**GAGGIONE HADAR70H40* (-ZOOM)**<br>**HERCULUX KIRIN HOLDER D35** | |

Version 1 Bayonet35/20 : 634x, 652x, 660x, 667x

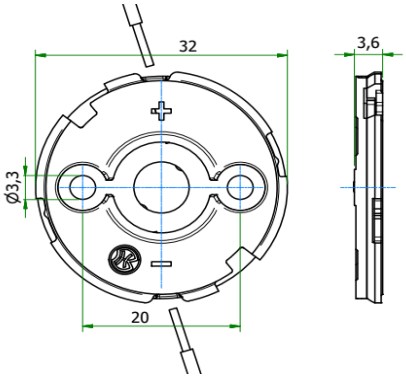

Spezielle Schraube mit flachem Kopf erforderlich
Special flat head screw required

e.g. 48279
M3 x 8mm

| | |
|---|---|
| **Bemessungsspannung** rated voltage | **Standard 250V DC**<br>**optional 450V DC** |
| **Bemessungsstrom** rated current | **5 A** |
| **Bemessungstemperatur** rated operating temperature | **T 120** |
| **Befestigung** fixing | **2 Schrauben M3**<br>2 screws M3 |
| **max. Drehmonent** max. torque | **0,3 Nm** |
| **Material des Halters** material of the holder | **PBT / Mikanit**<br>PBT / Mica |
| **Kontaktmaterial** contactmaterial | **CuSn**<br>CuSn |

**Zulässige COB Abmessungen**
Permissible COB dimensions

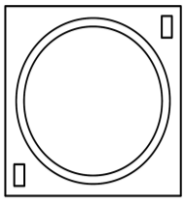

**siehe Einzeldatenblätter im Online Katalog**

see data sheets at our web catalogue

**Zertifikate / certificates**

**Ausweis-Nr.**

**File E4729**

**Weitere technische Daten und Montagehinweise sind im Technical Guide COB Halterserie 630 enthalten.**
Further technical details and mounting instructions are part of the Technical Guide COB holder series 630.

| Teilumhüllter Halter für folgende COBs / unenclosed holder for the following COBs: | | | | |
|---|---|---|---|---|
| **Hersteller** supplier | **COB Typ** COB Type | **Teile-Nr.** part no. | **Haltervariante** variant of holder | |
| Nichia | NV..S007Z / NF..T012B | **49049** | COB Holder Hybrid 652a | Bayonet35/20 |
| Nichia | NF..S024B / NT..S024B | **49049** | COB Holder Hybrid 652a | Bayonet35/20 |
| Nichia | NJ..S024Z | **49049** | COB Holder Hybrid 652a | Bayonet35/20 |

# COB HALTER HYBRID
## COB HOLDER HYBRID

# 630

BENDER +WIRTH

| | | |
|---|---|---|
| **Gehäusetyp:** Housing: | **3Hook** | **Größe / Size : 50 mm**<br>**Höhe / Height : 5,9 mm** |
| **Beispiele für passende Optiken** examples of suitable optics | **LEDiL ANGELA, ANGELINA, ANGELETTE**<br>**LEDiL MOLLY, RONDA (HOLDER A)**<br>**CARCLO S1** | |

Version 1: 633x, 634x, 637x, 638x, 641x, 652x, 660x

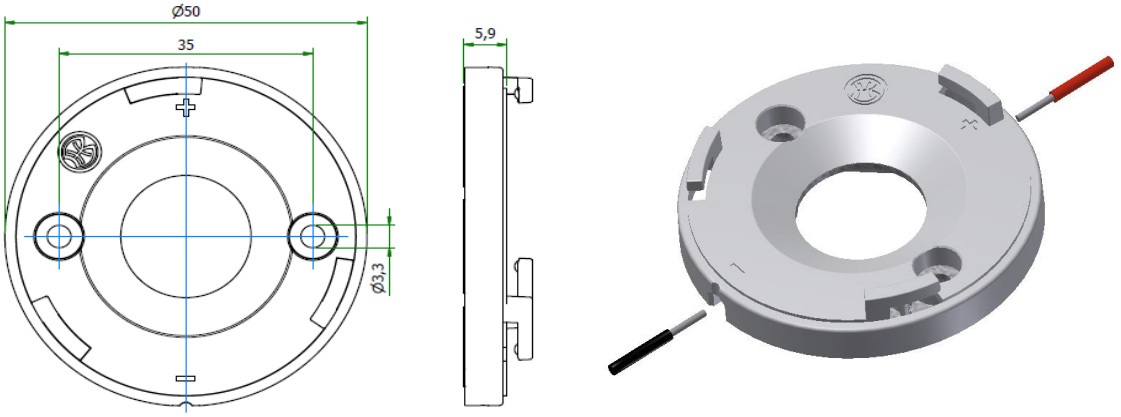


Version 2: 631x, 632x, 639x, 663x

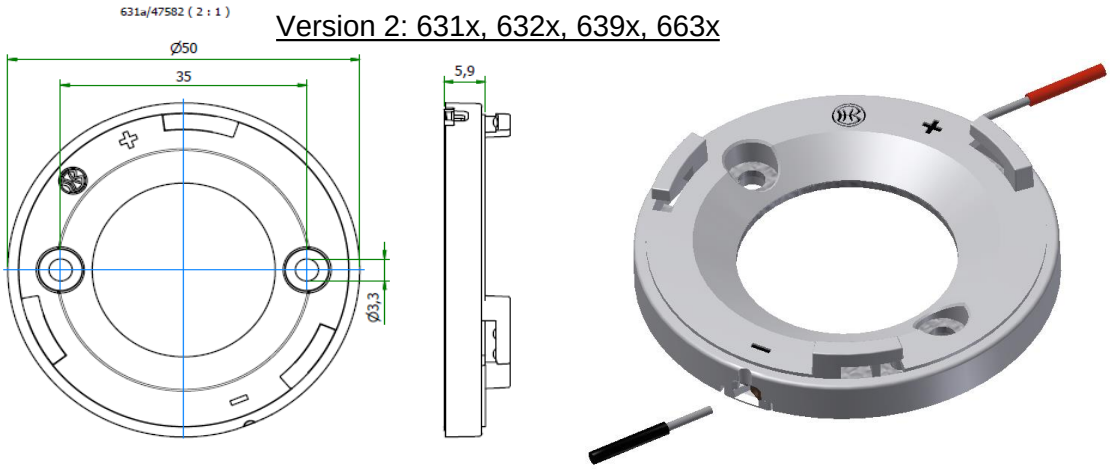


| | |
|---|---|
| **Bemessungsspannung**<br>rated voltage | **Standard 250V DC**<br>**optional 450V DC** |
| **Bemessungsstrom**<br>rated current | **5 A** |
| **Bemessungstemperatur**<br>rated operating temperature | **T 120** |
| **Befestigung**<br>fixing | **2 Schrauben M3**<br>2 screws M3 |
| **max. Drehmonent**<br>max. torque | **0,5 Nm** |
| **Material des Halters**<br>material of the holder | **PBT / Mikanit**<br>PBT / Mica |
| **Kontaktmaterial**<br>contactmaterial | **CuSn**<br>CuSn |

**Zulässige COB Abmessungen**
Permissible COB dimensions

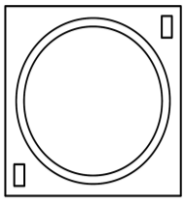

**siehe Einzeldatenblätter im Online Katalog**

see data sheets at our web catalogue

**Zertifikate /** certificates

**Ausweis-Nr.**

**File E4729**

**Weitere technische Daten und Montagehinweise sind im Technical Guide COB Halterserie 630 enthalten.**
Further technical details and mounting instructions are part of the Technical Guide COB holder series 630.

| Teilumhüllter Halter für folgende COBs / unenclosed holder for the following COBs: | | | |
|---|---|---|---|
| **Hersteller**<br>supplier | **COB Typ**<br>COB Type | **Teile-Nr.**<br>part no. | **Haltervariante**<br>variant of holder |
| Nichia | NV..S007Z / NF..T012B | **47456** | COB Holder Hybrid 652a 3Hook |
| Nichia | NF..S024B / NT..S024B | **47456** | COB Holder Hybrid 652a 3Hook |
| Nichia | NJ..S024Z | **47456** | COB Holder Hybrid 652a 3Hook |
| Nichia | NV..L016Z / NV..L024Z | **47466** | COB Holder Hybrid 638a 3Hook |
| Nichia | NF..L036B / NF..L048B | **47466** | COB Holder Hybrid 638a 3Hook |
| Nichia | NF..L060B | **47466** | COB Holder Hybrid 638a 3Hook |
| Nichia | NV..J048Z / NF..J108B | **47947** | COB Holder Hybrid 663a 3Hook |
| Nichia | NF..J130B | **47947** | COB Holder Hybrid 663a 3Hook |

# COB HALTER HYBRID
# COB HOLDER HYBRID

# 630

BENDER +WIRTH

| | | |
|---|---|---|
| **Gehäusetyp:** Housing: | **Lena** | **Größe / Size : 50 mm**<br>**Höhe / Height : 7,7 mm** |
| **Beispiele für passende Optiken** examples of suitable optics | **LEDiL LENA, LENINA** | |

Version 1: 633x, 634x, 637x, 638x, 641x, 652x, 660x

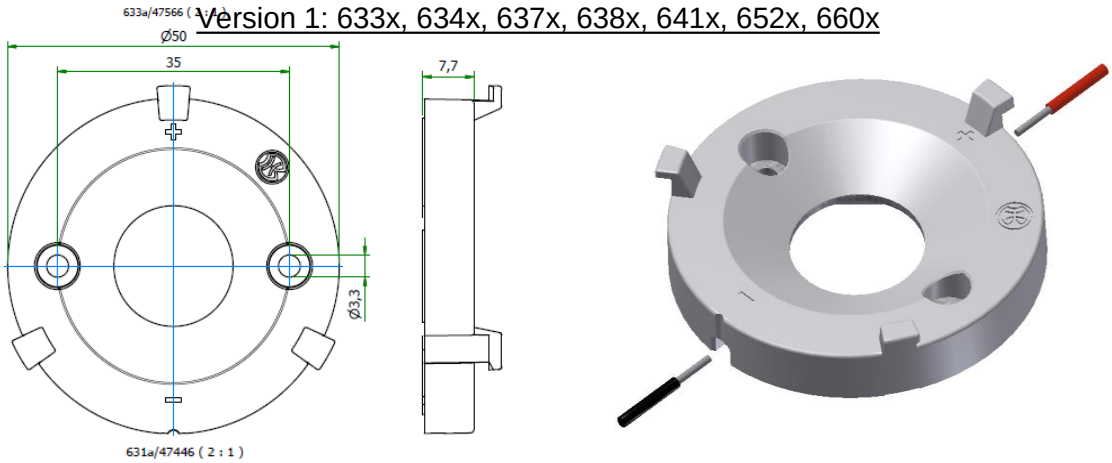


Version 2: 631x, 632x, 639x, 663x

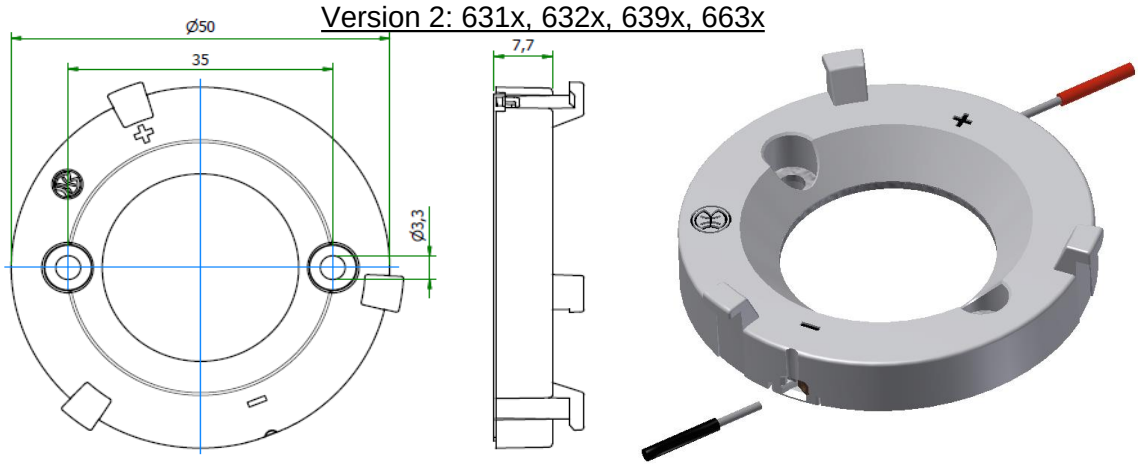


| | | |
|---|---|---|
| **Bemessungsspannung**<br>rated voltage | **Standard 250V DC**<br>**optional 450V DC** | **Zulässige COB Abmessungen**<br>Permissible COB dimensions |
| **Bemessungsstrom**<br>rated current | **5 A** | 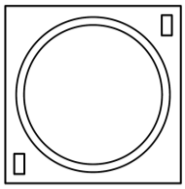 **siehe Einzeldatenblätter im Online Katalog**<br>see data sheets at our web catalogue |
| **Bemessungstemperatur**<br>rated operating temperature | **T 120** | |
| **Befestigung**<br>fixing | **2 Schrauben M3**<br>2 screws M3 | |
| **max. Drehmonent**<br>max. torque | **0,5 Nm** | |
| **Material des Halters**<br>material of the holder | **PBT / Mikanit**<br>PBT / Mica | **Zertifikate / certificates** |
| **Kontaktmaterial**<br>contactmaterial | **CuSn**<br>CuSn | **Ausweis-Nr.** **File E4729** |

**Weitere technische Daten und Montagehinweise sind im Technical Guide COB Halterserie 630 enthalten.**
Further technical details and mounting instructions are part of the Technical Guide COB holder series 630.

| Teilumhüllter Halter für folgende COBs / unenclosed holder for the following COBs: | | | |
|---|---|---|---|
| **Hersteller** supplier | **COB Typ** COB Type | **Teile-Nr.** part no. | **Haltervariante** variant of holder |
| Nichia | NV..S007Z / NF..T012B | **47457** | COB Holder Hybrid 652a Lena |
| Nichia | NF..S024B / NT..S024B | **47457** | COB Holder Hybrid 652a Lena |
| Nichia | NJ..S024Z | **47457** | COB Holder Hybrid 652a Lena |
| Nichia | NV..L016Z / NV..L024Z | **47467** | COB Holder Hybrid 638a Lena |
| Nichia | NF..L036B / NF..L048B | **47467** | COB Holder Hybrid 638a Lena |
| Nichia | NF..L060B | **47467** | COB Holder Hybrid 638a Lena |
| Nichia | NV..J048Z / NF..J108B | **47951** | COB Holder Hybrid 663a Lena |
| Nichia | NF..J130B | **47951** | COB Holder Hybrid 663a Lena |

# COB HALTER HYBRID
## COB HOLDER HYBRID

# 630

BENDER +WIRTH

| | | |
|---|---|---|
| **Gehäusetyp:** Housing: | **RJR** | **Größe / Size : 61,5 mm**<br>**Höhe / Height : 6,5 mm** |
| **Beispiele für passende Optiken** examples of suitable optics | **BARTENBACH RJR OPTIC** | |

Version 1: 633x, 634x, 637x, 638x, 641x, 652x, 660x

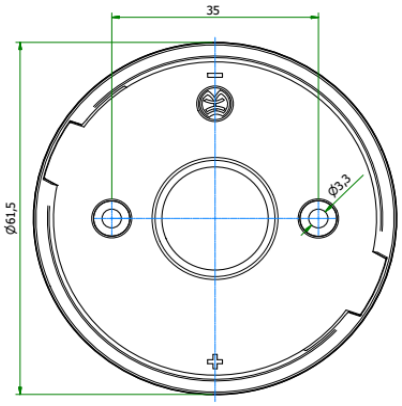


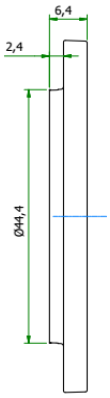


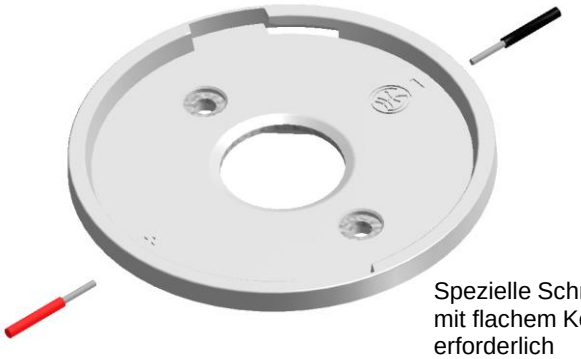

Spezielle Schraube mit flachem Kopf erforderlich
Special flat head screw required

e.g. 48279
M3 x 8mm

Version 2: 631x, 632x, 639x, 663x

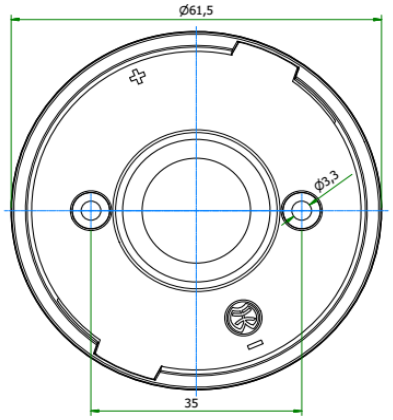


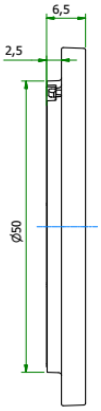

| | |
|---|---|
| **Bemessungsspannung**<br>rated voltage | **Standard 250V DC**<br>**optional 450V DC** |
| **Bemessungsstrom**<br>rated current | **5 A** |
| **Bemessungstemperatur**<br>rated operating temperature | **T 120** |
| **Befestigung**<br>fixing | **2 Schrauben M3**<br>2 screws M3 |
| **max. Drehmonent**<br>max. torque | **0,5 Nm** |
| **Material des Halters**<br>material of the holder | **PBT / Mikanit**<br>PBT / Mica |
| **Kontaktmaterial**<br>contactmaterial | **CuSn**<br>CuSn |

**Zulässige COB Abmessungen**
Permissible COB dimensions

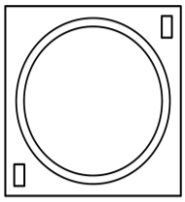

**siehe Einzeldatenblätter im Online Katalog**

see data sheets at our web catalogue

**Zertifikate / certificates**

**Ausweis-Nr. 40050075**

**File E472943**

**Weitere technische Daten und Montagehinweise sind im Technical Guide COB Halterserie 630 enthalten.**
Further technical details and mounting instructions are part of the Technical Guide COB holder series 630.

# COB HALTER HYBRID
## COB HOLDER HYBRID

# 630

BENDER +WIRTH

| Teilumhüllter Halter für folgende COBs / unenclosed holder for the following COBs: | | | |
|---|---|---|---|
| **Hersteller** supplier | **COB Typ** COB Type | **Teile-Nr.** part no. | **Haltervariante** variant of holder |
| Nichia | NV..J048Z / NF..J108B | **48804** | COB Holder Hybrid 663a RJR |
| Nichia | NF..J130B | **48804** | COB Holder Hybrid 663a RJR |
| **Ist Ihre COB nicht aufgeführt? Bitte sprechen Sie uns an.** If your COB is not listed, please contact us. | | | |

# COB HALTER HYBRID
## COB HOLDER HYBRID

# 630

BENDER +WIRTH

| | | |
|---|---|---|
| **Gehäusetyp:** Housing: | **NATA** | **Größe / Size : 44/50 mm**<br>**Höhe / Height : 5,8 mm** |
| **Beispiele für passende Optiken** examples of suitable optics | **NATA M30 e.g. 1687M,1709M,1-0788M etc.**<br>**NATA M39 e.g. 2-1672M, 2-1674M, 2-2010M etc** | |

Version 1 M30 : 633x, 634x, 637x, 638x, 641x, 652x, 660x

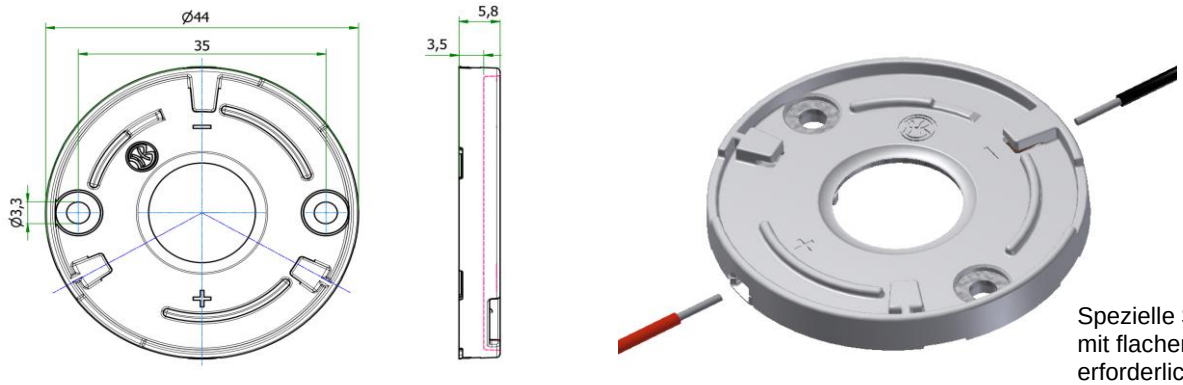


Spezielle Schraube mit flachem Kopf erforderlich
Special flat head screw required

e.g. 48279
M3 x 8mm

Version 2 M39 : 631x, 632x, 639x, 663x

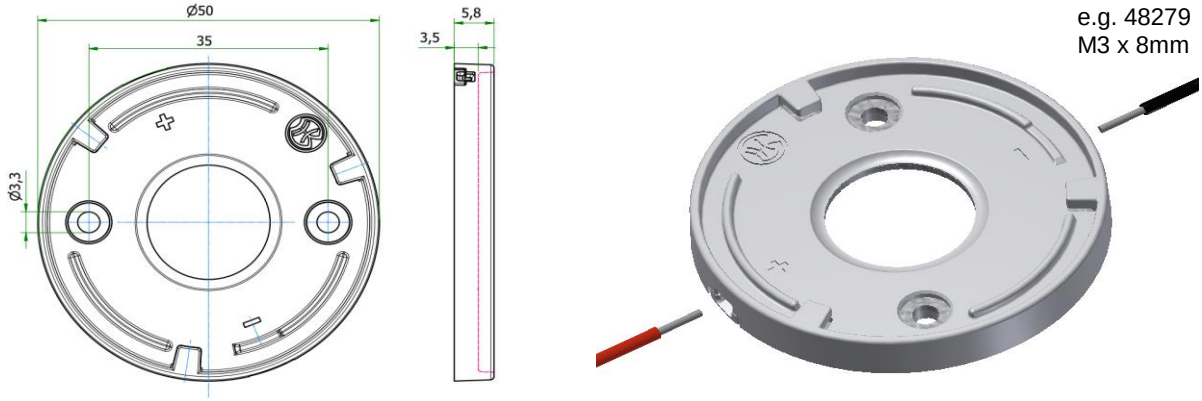


| | |
|---|---|
| **Bemessungsspannung**<br>rated voltage | **Standard 250V DC**<br>**optional 450V DC** |
| **Bemessungsstrom**<br>rated current | **5 A** |
| **Bemessungstemperatur**<br>rated operating temperature | **T 120** |
| **Befestigung**<br>fixing | **2 Schrauben M3**<br>2 screws M3 |
| **max. Drehmonent**<br>max. torque | **0,5 Nm** |
| **Material des Halters**<br>material of the holder | **PBT / Mikanit**<br>PBT / Mica |
| **Kontaktmaterial**<br>contactmaterial | **CuSn**<br>CuSn |

**Zulässige COB Abmessungen**
Permissible COB dimensions

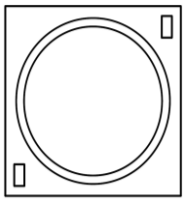

**siehe Einzeldatenblätter im Online Katalog**

see data sheets at our web catalogue

**Zertifikate /** certificates

**Ausweis-Nr. 40050075**

**File E472943**

**Weitere technische Daten und Montagehinweise sind im Technical Guide COB Halterserie 630 enthalten.**
Further technical details and mounting instructions are part of the Technical Guide COB holder series 630.

# COB HALTER HYBRID
## COB HOLDER HYBRID

# 630

BENDER +WIRTH

| Teilumhüllter Halter für folgende COBs / unenclosed holder for the following COBs: | | | | |
|---|---|---|---|---|
| **Hersteller** supplier | **COB Typ** COB Type | **Teile-Nr.** part no. | **Haltervariante** variant of holder | |
| Nichia | NV..S007Z / NF..T012B | **48668** | COB Holder Hybrid 652a | Nata M30 |
| Nichia | NF..S024B / NT..S024B | **48668** | COB Holder Hybrid 652a | Nata M30 |
| Nichia | NJ..S024Z | **48668** | COB Holder Hybrid 652a | Nata M30 |
| Nichia | NV..L016Z / NV..L024Z | **48667** | COB Holder Hybrid 638a | Nata M30 |
| Nichia | NF..L036B / NF..L048B | **48667** | COB Holder Hybrid 638a | Nata M30 |
| Nichia | NF..L060B | **48667** | COB Holder Hybrid 638a | Nata M30 |
| Nichia | NV..J048Z / NF..J108B | **48666** | COB Holder Hybrid 663a | Nata M39 |
| Nichia | NF..J130B | **48666** | COB Holder Hybrid 663a | Nata M39 |
| **Ist Ihre COB nicht aufgeführt? Bitte sprechen Sie uns an.** If your COB is not listed, please contact us. | | | | |

**Basishalter für Anwendungen, in denen keine besondere Anbindung zur Optik erforderlich ist.**
**Basic holders for applications without specific connection requirements to the optical system**

| | | |
|---|---|---|
| **Weitere Details unter**<br>More details at | www.bender-wirth.de | **Zertifikate /** certificates |
| **LED Halter B+W**<br>LED Holder B+W | 4xx / Typ xx | **Ausweis-Nr.** **40041342**<br>**File** **E472943** |

4xx / Typ xx

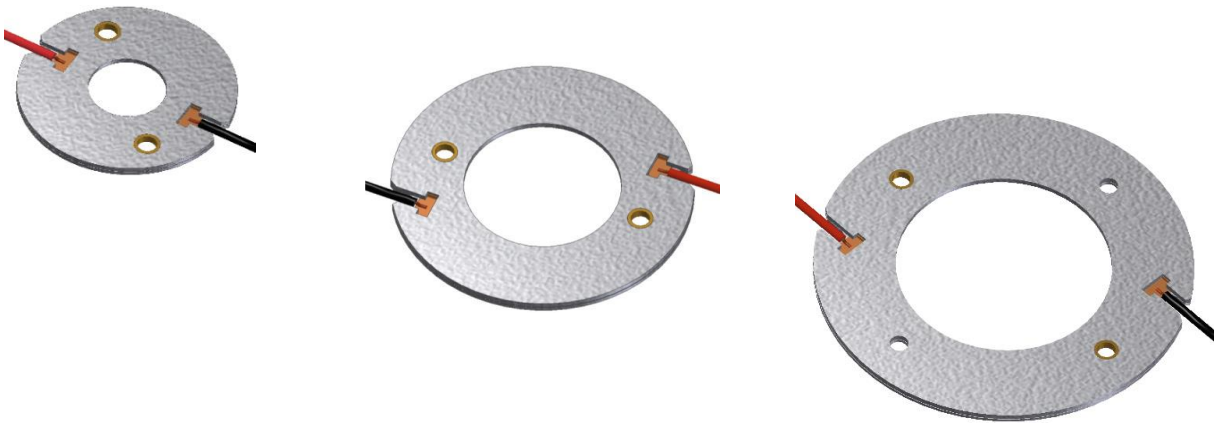

## Mögliche Halter / COB Kombinationen / Holder / COB combinations

| COB Hersteller<br>COB Supplier | COB Typ<br>COB Type | Halter<br>Holder | Abmessungen<br>Dimensions |
|---|---|---|---|
| Nichia | NV..S007Z / NF..T012B | 452 Typ 1 | Ø 30 / 20 |
| Nichia | NF..S024B / NT..S024B | 452 Typ 1 | Ø 30 / 20 |
| Nichia | NJ..S024Z | 452 Typ 1 | Ø 30 / 20 |
| Nichia | NV..L016Z / NV..L024Z | 438 Typ 1 | 33 x 27 / 28 |
| Nichia | NF..L036B / NF..L048B | 438 Typ 1 | 33 x 27 / 28 |
| Nichia | NF..L060B | 438 Typ 1 | 33 x 27 / 28 |
| Nichia | NV..J048Z / NF..J108B | 463 Typ 1 | Ø 50 / 35 |
| Nichia | NF..J130B | 463 Typ 1 | Ø 50 / 35 |
| Nichia | NF..H306B | 488 Typ 1 HV | Ø 65 / 50 |
| Nichia | NJNWS012Z Tunable | 495 Typ L8 HV | Ø 44 / 35 |
| Nichia | NJCWL024Z Tunable | 497 Typ L8 HV | Ø 44 / 35 |
| Nichia | NVCWJ024Z Tunable | 498 Typ L8 HV | Ø 44 / 35 |

ALMECO GROUP

reflect+A team

## 108n / 108w

| | |
|---|---|
| **Almeco Reflektor**<br>Almeco reflector | **108n**: 9568-01-xx-xx<br>beam: <25°<br>**108w**: 9567-01-xx-xx<br>beam: >40° |
| **Hersteller Webseite**<br>Manufacturer website | www.almecogroup.com |
| **LED Halter B+W**<br>LED Holder B+W | 4xx / Typ A1 |

4xx Typ A1

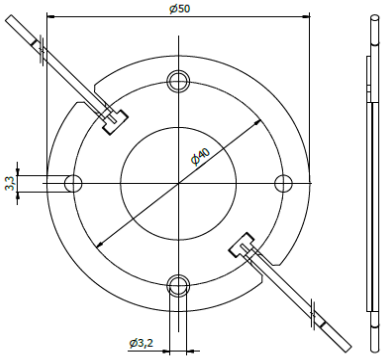


Reflector 108n

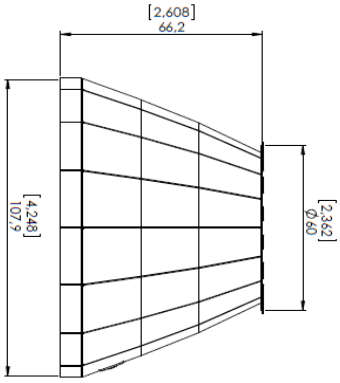


Reflector 108w

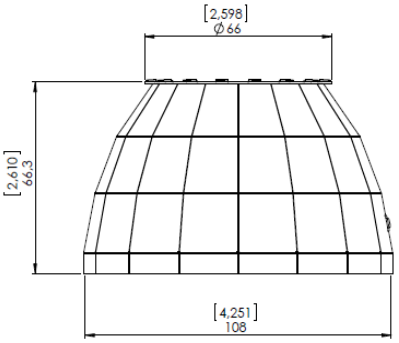


## Mögliche Halter / COB Kombinationen / Holder / COB combinations Almeco 108n / 108w

| COB Hersteller<br>COB Supplier | COB Typ<br>COB Type | Halter<br>Holder | Reflektor<br>Reflector |
|---|---|---|---|
| Nichia | NV..S007Z / NF..T012B | 452 Typ A1 | see part numbers above |
| Nichia | NF..S024B / NT..S024B | 452 Typ A1 | see part numbers above |
| Nichia | NJ..S024Z | 452 Typ A1 | see part numbers above |
| Nichia | NV..L016Z / NV..L024Z | 438 Typ A1 | see part numbers above |
| Nichia | NF..L036B / NF..L048B | 438 Typ A1 | see part numbers above |
| Nichia | NF..L060B | 438 Typ A1 | see part numbers above |
| Nichia | NV..J048Z / NF..J108B | 463 Typ A1 | see part numbers above |
| Nichia | NF..J130B | 463 Typ A1 | see part numbers above |
| Nichia | NJNWS012Z Tunable | 495 Typ A1 HV | see part numbers above |
| Nichia | NJCWL024Z Tunable | 497 Typ A1 HV | see part numbers above |
| Nichia | NVCWJ024Z Tunable | 498 Typ A1 HV | see part numbers above |

ALMECO GROUP

reflect+A team

## DKL 97

| | |
|---|---|
| **Almeco Reflektor**<br>Almeco reflector | 9566-01-xx-xx<br>*beam: batwing* |
| **Hersteller Webseite**<br>Manufacturer website | www.almecogroup.com |
| **LED Halter B+W**<br>LED Holder B+W | 4xx / Typ A1 |

4xx Typ A1

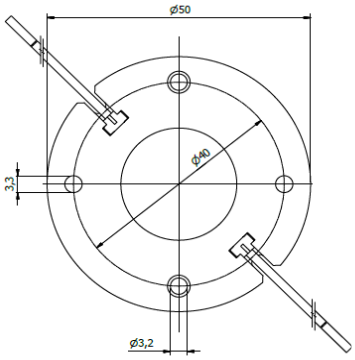


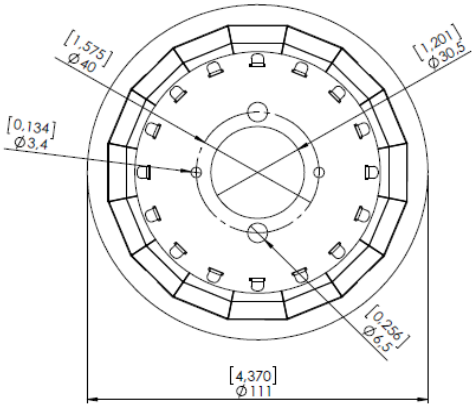


Reflector DKL97

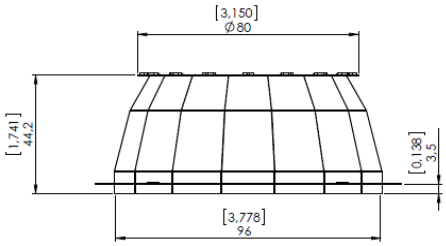


## Mögliche Halter / COB Kombinationen / Holder / COB combinations Almeco DKL 97

| COB Hersteller<br>COB Supplier | COB Typ<br>COB Type | Halter<br>Holder | Reflektor<br>Reflector |
|---|---|---|---|
| Nichia | NV..S007Z / NF..T012B | 452 Typ A1 | see part numbers above |
| Nichia | NF..S024B / NT..S024B | 452 Typ A1 | see part numbers above |
| Nichia | NJ..S024Z | 452 Typ A1 | see part numbers above |
| Nichia | NV..L016Z / NV..L024Z | 438 Typ A1 | see part numbers above |
| Nichia | NF..L036B / NF..L048B | 438 Typ A1 | see part numbers above |
| Nichia | NF..L060B | 438 Typ A1 | see part numbers above |
| Nichia | NV..J048Z / NF..J108B | 463 Typ A1 | see part numbers above |
| Nichia | NF..J130B | 463 Typ A1 | see part numbers above |
| Nichia | NJNWS012Z Tunable | 495 Typ A1 HV | see part numbers above |
| Nichia | NJCWL024Z Tunable | 497 Typ A1 HV | see part numbers above |
| Nichia | NVCWJ024Z Tunable | 498 Typ A1 HV | see part numbers above |

ALMECO GROUP

reflect+A team

## DKL194/SQ120

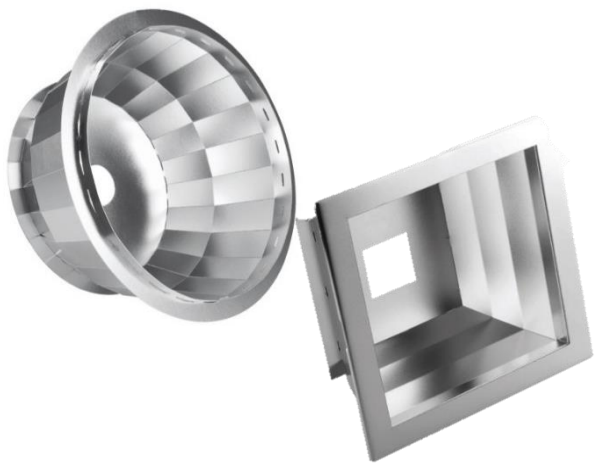

| | |
|---|---|
| **Almeco Reflektor**<br>Almeco reflector | **DKL194**: 9565-01-xx-xx<br>beam: batwing<br>**DKL SQ120**: 9569-01-xx-xx<br>beam: batwing |
| **Hersteller Webseite**<br>Manufacturer website | www.almecogroup.com |
| **LED Halter B+W**<br>LED Holder B+W | 4xx / Typ A1 |

4xx Typ A1

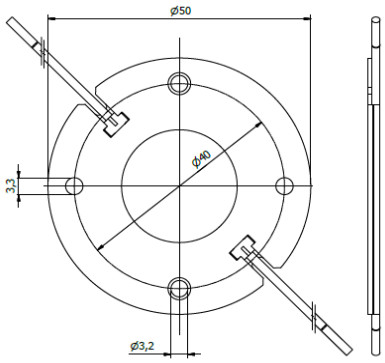


Reflector DKL 194

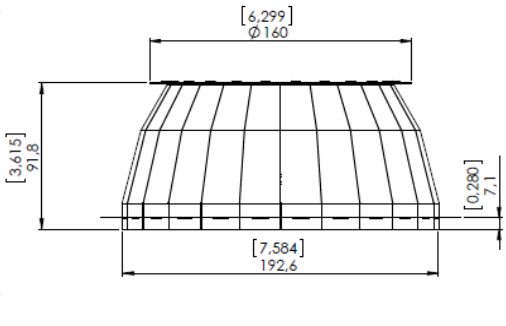


Reflector DKL SQ120

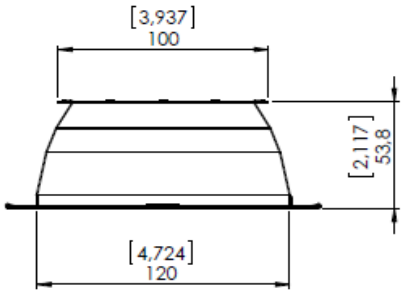


**Mögliche Halter / COB Kombinationen / Holder / COB combinations** **Almeco DKL 194/SQ120**

| COB Hersteller<br>COB Supplier | COB Typ<br>COB Type | Halter<br>Holder | Reflektor<br>Reflector |
|---|---|---|---|
| **Nichia** | **NV..J048Z / NF..J108B** | **463 Typ A1** | **see part numbers above** |
| **Nichia** | **NF..J130B** | **463 Typ A1** | **see part numbers above** |

Bartenbach
THE LIGHTING INNOVATORS

**RJR**

**Bartenbach Reflektor**
Bartenbach reflector — RJR Reflektor Serie

**Hersteller Webseite**
Manufacturer website — www.bartenbach.com

**LED Halter B+W**
LED Holder B+W — 4xx / Typ Z1

4xx Typ Z1

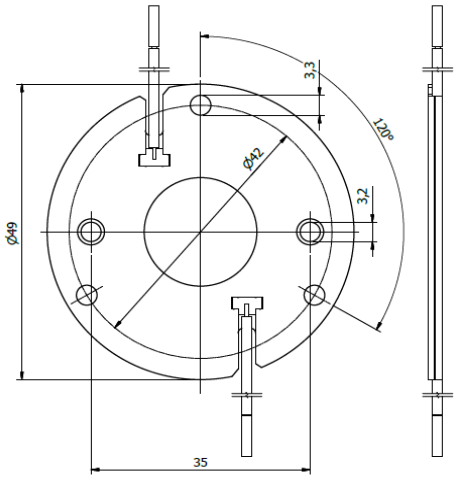


Adapter CJR-6262-0000-00

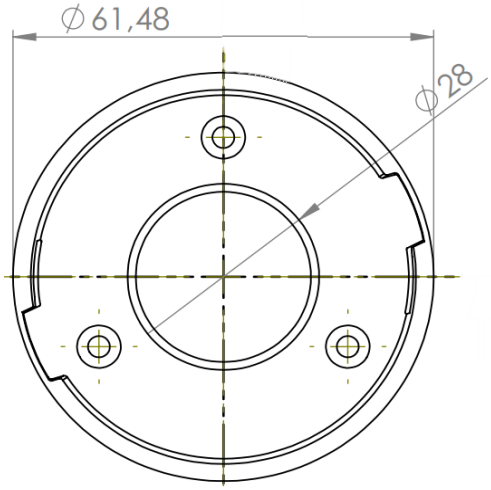


**Mögliche Halter / COB Kombinationen / Holder / COB combinations** **Bartenbach RJR**

| COB Hersteller<br>COB Supplier | COB Typ<br>COB Type | Halter<br>Holder | Linse / Halter<br>Lense / Holder |
|---|---|---|---|
| Nichia | NV..J048Z / NF..J108B | 463 Typ Z1 | Adapter CJR-6262-0000-00 |
| Nichia | NF..J130B | 463 Typ Z1 | Adapter CJR-6262-0000-00 |

carclo Optics

## 26,5mm Family

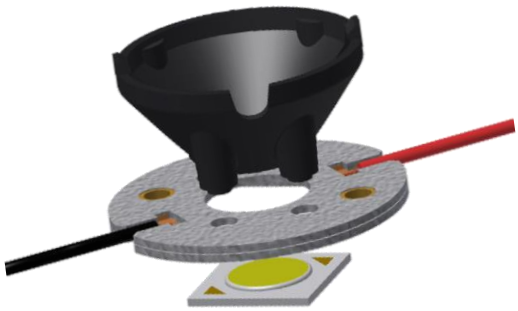

| | |
|---|---|
| **Carclo Linsenhalter**<br>Carclo lense holder | 10460 white<br>10490 black<br>12040 clear |
| **Hersteller Webseite**<br>Manufacturer website | www.carclo-optics.com |
| **LED Halter B+W**<br>LED Holder B+W | 4xx / Typ C2<br>4xx / Typ C3 |

4xx Typ C2

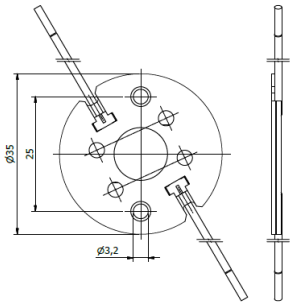


4xx Typ C3

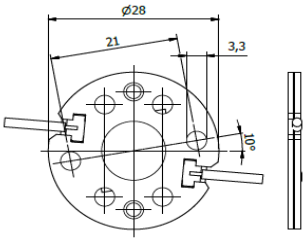


10460 white

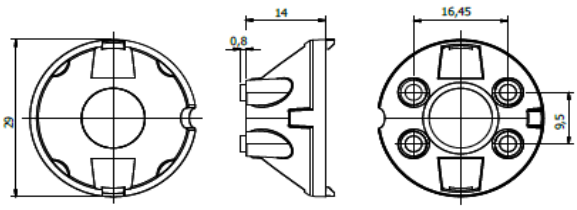


## Mögliche Halter / COB Kombinationen / Holder / COB combinations Carclo 26,5 mm

| COB Hersteller<br>COB Supplier | COB Typ<br>COB Type | Halter<br>Holder | Adapter<br>Base part |
|---|---|---|---|
| **Nichia** | **NV..S007Z / NF..T012B** | **452 Typ C2** | **10460 (white)** |
| **Nichia** | **NF..S024B / NT..S024B** | **452 Typ C2** | **10460 (white)** |
| **Nichia** | **NJ..S024Z** | **452 Typ C2** | **10460 (white)** |
| **Nichia** | **NJNWS012Z Tunable** | **495 Typ C2 HV** | **10460 (white)** |

carclo Optics

## Newton

**Carclo Adapter**
Carclo adaptor
12796

**Hersteller Webseite**
Manufacturer website
www.carclo-optics.com

**LED Halter B+W**
LED Holder B+W
4xx / Typ C1

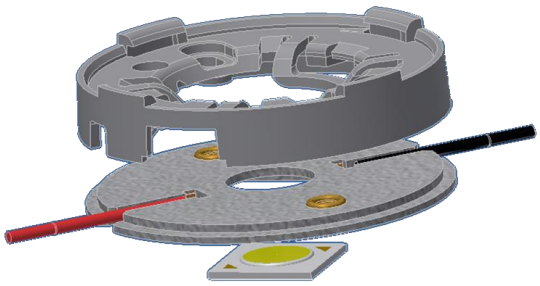

4xx Typ C1

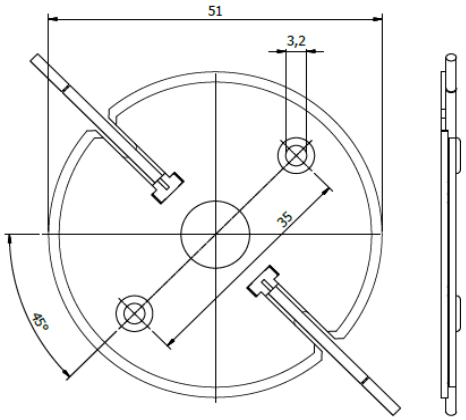


12796

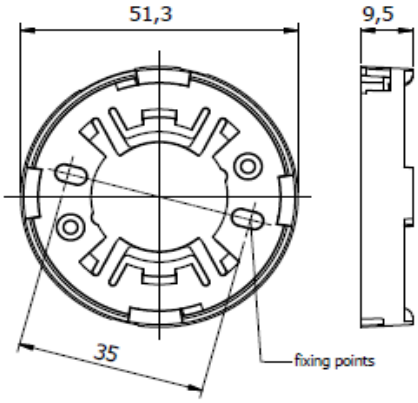


## Mögliche Halter / COB Kombinationen / Holder / COB combinations Carclo Newton

| COB Hersteller<br>COB Supplier | COB Typ<br>COB Type | Halter<br>Holder | Adapter<br>Base part |
|---|---|---|---|
| Nichia | NV..S007Z / NF..T012B | 452 Typ C1 | 12796 |
| Nichia | NF..S024B / NT..S024B | 452 Typ C1 | 12796 |
| Nichia | NJ..S024Z | 452 Typ C1 | 12796 |
| Nichia | NV..L016Z / NV..L024Z | 438 Typ C1 | 12796 |
| Nichia | NF..L036B / NF..L048B | 438 Typ C1 | 12796 |
| Nichia | NF..L060B | 438 Typ C1 | 12796 |
| Nichia | NV..J048Z / NF..J108B | 463 Typ C1 | 12796 |
| Nichia | NF..J130B | 463 Typ C1 | 12796 |
| Nichia | NJNWS012Z Tunable | 495 Typ C1 HV | 12796 |
| Nichia | NJCWL024Z Tunable | 497 Typ C1 HV | 12796 |
| Nichia | NVCWJ024Z Tunable | 498 Typ C1 HV | 12796 |

FRAEN MAXIMIZING LIGHT

## FNL-N1-75

| | |
|---|---|
| **Fraen Linse**<br>Fraen lense | FNL-N1-75-HB |
| **Fraen Adapter**<br>Fraen base part | FTS-FNL 7551 B |
| **Hersteller Webseite**<br>Manufacturer website | www.fraen.com/optics |
| **LED Halter B+W**<br>LED Holder B+W | 4xx / Typ F1 |

4xx Typ F1

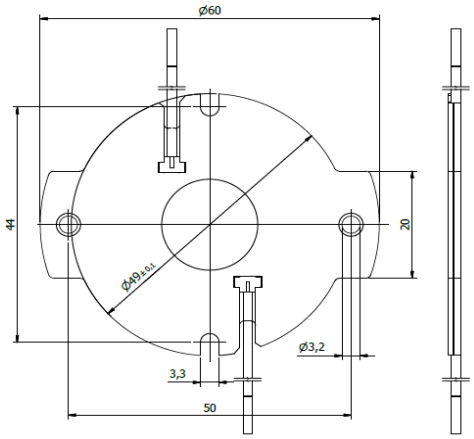


FTS-FNL 7551 B

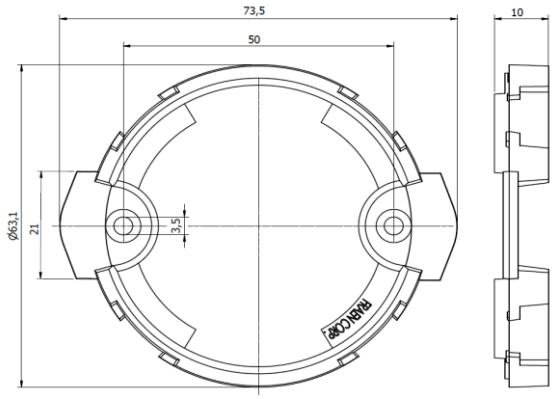


## Mögliche Halter / COB Kombinationen / Holder / COB combinations FRAEN FNL-N1-75

| COB Hersteller<br>COB Supplier | COB Typ<br>COB Type | Halter<br>Holder | Adapter<br>Base part |
|---|---|---|---|
| Nichia | NV..S007Z / NF..T012B | 452 Typ F1 | FTS-FNL 7551 B |
| Nichia | NF..S024B / NT..S024B | 452 Typ F1 | FTS-FNL 7551 B |
| Nichia | NJ..S024Z | 452 Typ F1 | FTS-FNL 7551 B |
| Nichia | NV..L016Z / NV..L024Z | 438 Typ F1 | FTS-FNL 7551 B |
| Nichia | NF..L036B / NF..L048B | 438 Typ F1 | FTS-FNL 7551 B |
| Nichia | NF..L060B | 438 Typ F1 | FTS-FNL 7551 B |
| Nichia | NV..J048Z / NF..J108B | 463 Typ F1 | FTS-FNL 7551 B |
| Nichia | NF..J130B | 463 Typ F1 | FTS-FNL 7551 B |
| Nichia | NJNWS012Z Tunable | 495 Typ F1 HV | FTS-FNL 7551 B |
| Nichia | NJCWL024Z Tunable | 497 Typ F1 HV | FTS-FNL 7551 B |
| Nichia | NVCWJ024Z Tunable | 498 Typ F1 HV | FTS-FNL 7551 B |

GAGGIONE

*Reflektor Ø45 AF* **LLR01N**

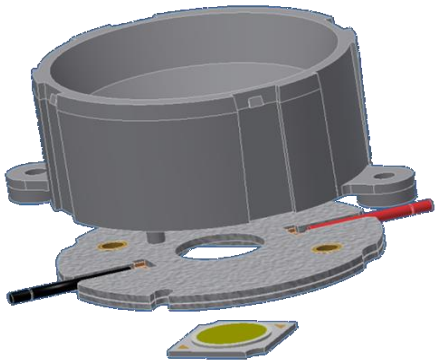

| | |
|---|---|
| **Gaggione Reflektor**<br>Gaggione reflector | LLR01N11AE1 |
| **Hersteller Webseite**<br>Manufacturer website | www.optic-gaggione.com |
| **LED Halter B+W**<br>LED Holder B+W | 4xx / Typ G1 |

4xx Typ G1

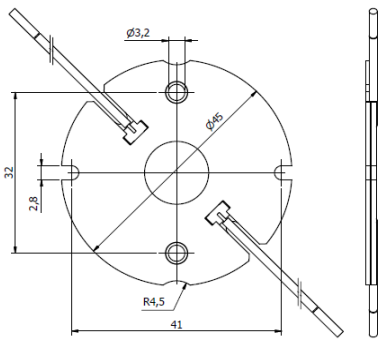


LLR01N11AE1

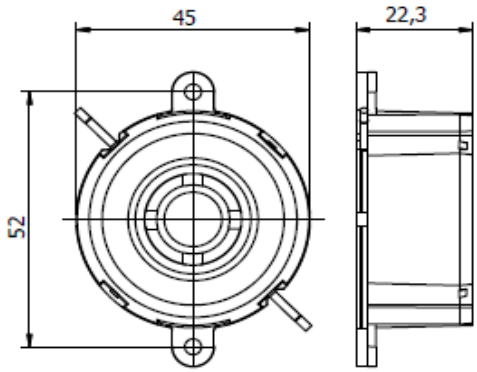


**Mögliche Halter / COB Kombinationen / Holder / COB combinations** **Gaggione LLR01N**

| COB Hersteller<br>COB Supplier | COB Typ<br>COB Type | Halter<br>Holder | Reflektor<br>Reflector |
|---|---|---|---|
| Nichia | NV..S007Z / NF..T012B | 452 Typ G1 | LLR01N11AE1 |
| Nichia | NF..S024B / NT..S024B | 452 Typ G1 | LLR01N11AE1 |
| Nichia | NJ..S024Z | 452 Typ G1 | LLR01N11AE1 |
| Nichia | NV..L016Z / NV..L024Z | 438 Typ G1 | LLR01N11AE1 |
| Nichia | NF..L036B / NF..L048B | 438 Typ G1 | LLR01N11AE1 |
| Nichia | NF..L060B | 438 Typ G1 | LLR01N11AE1 |
| Nichia | NJNWS012Z Tunable | 495 Typ G1 HV | LLR01N11AE1 |
| Nichia | NJCWL024Z Tunable | 497 Typ G1 HV | LLR01N11AE1 |
| Nichia | NVCWJ024Z Tunable | 498 Typ G1 HV | LLR01N11AE1 |

GAGGIONE

*Reflektor Ø70 AF* **LLR05N**

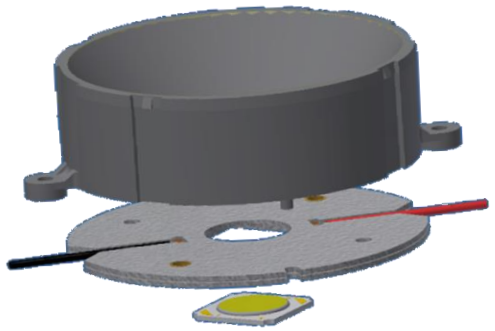

**Gaggione Reflektor**
Gaggione reflector — LLR05N11AC1

**Hersteller Webseite**
Manufacturer website — www.optic-gaggione.com

**LED Halter B+W**
LED Holder B+W — 4xx / Typ G2

4xx Typ G2

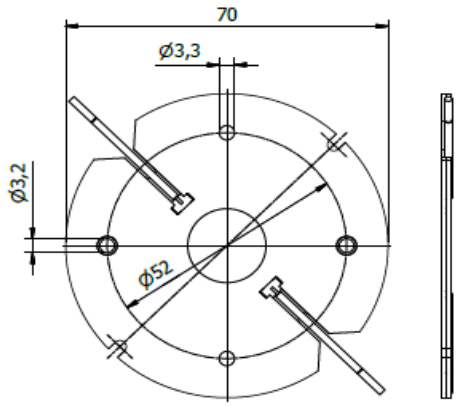


LLR05N11AC1

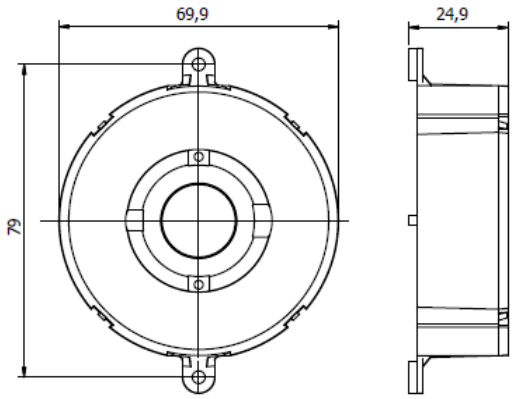


**Mögliche Halter / COB Kombinationen / Holder / COB combinations** **Gaggione LLR05N**

| COB Hersteller<br>COB Supplier | COB Typ<br>COB Type | Halter<br>Holder | Reflektor<br>Reflector |
|---|---|---|---|
| Nichia | NV..S007Z / NF..T012B | 452 Typ G2 | LLR05N11AC1 |
| Nichia | NF..S024B / NT..S024B | 452 Typ G2 | LLR05N11AC1 |
| Nichia | NJ..S024Z | 452 Typ G2 | LLR05N11AC1 |
| Nichia | NV..L016Z / NV..L024Z | 438 Typ G2 | LLR05N11AC1 |
| Nichia | NF..L036B / NF..L048B | 438 Typ G2 | LLR05N11AC1 |
| Nichia | NF..L060B | 438 Typ G2 | LLR05N11AC1 |
| Nichia | NV..J048Z / NF..J108B | 463 Typ G2 | LLR05N11AC1 |
| Nichia | NF..J130B | 463 Typ G2 | LLR05N11AC1 |
| Nichia | NJNWS012Z Tunable | 495 Typ G2 HV | LLR05N11AC1 |
| Nichia | NJCWL024Z Tunable | 497 Typ G2 HV | LLR05N11AC1 |
| Nichia | NVCWJ024Z Tunable | 498 Typ G2 HV | LLR05N11AC1 |

GAGGIONE

## LLC05.. / LLC15.. / LLC25..
## 32mm Collimator series

| | |
|---|---|
| **Gaggione Linse / Halter**<br>Gaggione lenses / holder | LLC05xx PC, PMMA or Silicone Collimator<br>LLC15xx PC, PMMA or Silicone Collimator<br>LLC25xx PC or PMMA Collimator<br>LLH02CB10.. holder<br>*for all versions* |
| **Hersteller Webseite**<br>Manufacturer website | www.optic-gaggione.com |
| **LED Halter B+W**<br>LED Holder B+W | 4xx / Typ K3 |

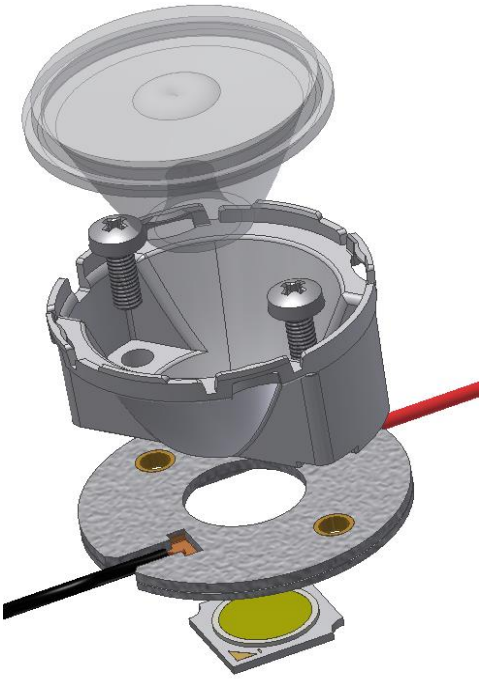

4xx Typ K3

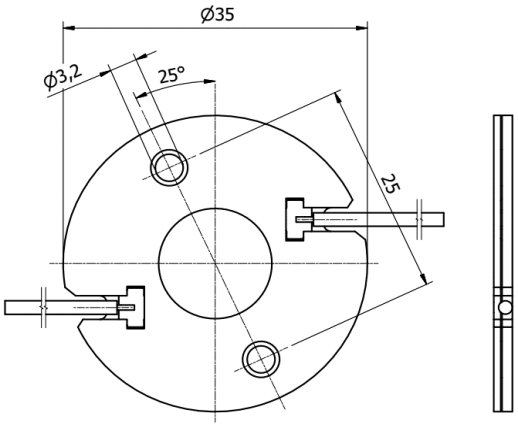


Collimator with holder

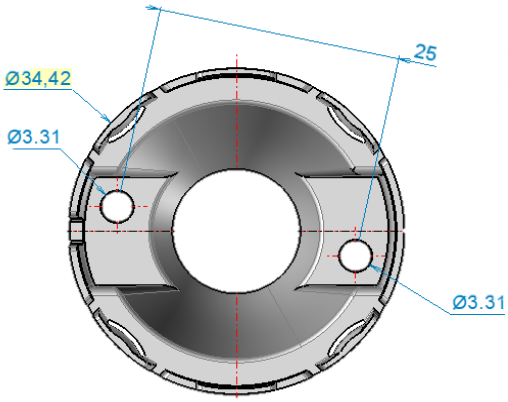


**Mögliche Halter / COB Kombinationen / Holder / COB combinations** **Gaggione LLC15**

| COB Hersteller<br>COB Supplier | COB Typ<br>COB Type | Halter<br>Holder | Linsen-Halter<br>Lense-Holder |
|---|---|---|---|
| Nichia | NV..S007Z / NF..T012B | 452 Typ K3 | LLH02CB10.. Holder |
| Nichia | NF..S024B / NT..S024B | 452 Typ K3 | LLH02CB10.. Holder |
| Nichia | NJ..S024Z | 452 Typ K3 | LLH02CB10.. Holder |
| Nichia | NV..L016Z / NV..L024Z | 438 Typ K3 | LLH02CB10.. Holder |
| Nichia | NJNWS012Z Tunable | 495 Typ K3 HV | LLH02CB10.. Holder |
| Nichia | NJCWL024Z Tunable | 497 Typ K3 HV | LLH02CB10.. Holder |

GAGGIONE

## LLH66B1 System Bayonet50G

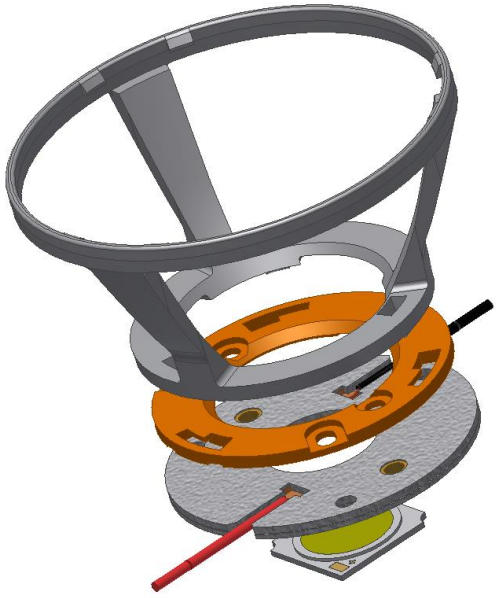

| | |
|---|---|
| **Gaggione Linse / Halter**<br>Gaggione lenses / holder | LLH66B1.. Base<br>*for both versions*<br>HADAR70 (-ZOOM)<br>LLC66<br>LLC79<br>VEGA45<br>SIRIUS50 (-ZOOM)<br>UFO45 (-ZOOM)<br>UFO67 (-ZOOM) |
| **Hersteller Webseite**<br>Manufacturer website | www.optic-gaggione.com |
| **LED Halter B+W**<br>LED Holder B+W | 4xx / Typ Z1 |

4xx Typ Z1

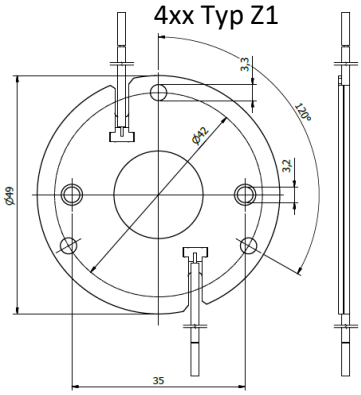


Suitable optics

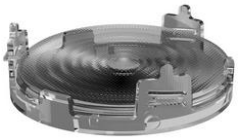

UFO45Z
45mm low-profile
Zoom collimator

UFO67Z
67mm low-profile
Zoom collimator

UFO67
67mm low-profile
Fresnel collimator

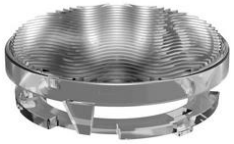

UFO45A
45mm low-profile
Wall washer

LLC79
45mm silicone
collimator

VEGA45
45mm PMMA
collimator

SIRIUS50
50mm ZOOM
collimator

LLC66
67mm silicone collimator

HADAR70
70mm PMMA collimator

HADAR70
70mm ZOOM PMMA collimator

## Mögliche Halter / COB Kombinationen / Holder / COB combinations Gaggione LLC66

| COB Hersteller<br>COB Supplier | COB Typ<br>COB Type | Halter<br>Holder | Linsenhalter<br>Lense holder |
|---|---|---|---|
| Nichia | NV..S007Z / NF..T012B | 452 Typ Z1 | LLH066B1.. |
| Nichia | NF..S024B / NT..S024B | 452 Typ Z1 | LLH066B1.. |
| Nichia | NJ..S024Z | 452 Typ Z1 | LLH066B1.. |
| Nichia | NV..L016Z / NV..L024Z | 438 Typ Z1 | LLH066B1.. |
| Nichia | NF..L036B / NF..L048B | 438 Typ Z1 | LLH066B1.. |
| Nichia | NF..L060B | 438 Typ Z1 | LLH066B1.. |
| Nichia | NV..J048Z / NF..J108B | 463 Typ Z1 | LLH066B1.. |
| Nichia | NF..J130B | 463 Typ Z1 | LLH066B1.. |
| Nichia | NJNWS012Z Tunable | 495 Typ Z1 HV | LLH066B1.. |
| Nichia | NJCWL024Z Tunable | 497 Typ Z1 HV | LLH066B1.. |
| Nichia | NVCWJ024Z Tunable | 498 Typ Z1 HV | LLH066B1.. |

JORDAN

## Serie 75

**Jordan Reflektor**
Jordan reflector

112991S03101 - Spot
113238S03101 - Medium
113239S03101 - Flood

**Hersteller Webseite**
Manufacturer website

www.jordan-reflektoren.de

**LED Halter B+W**
LED Holder B+W

4xx / Typ Z1

4xx Typ Z1

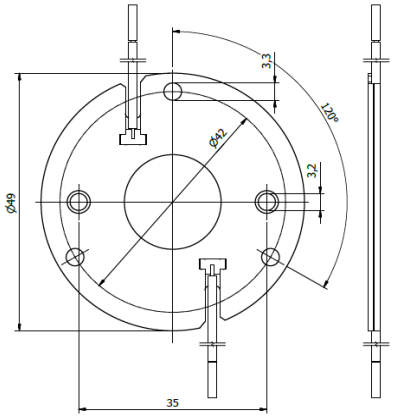


11xxxxS03101*

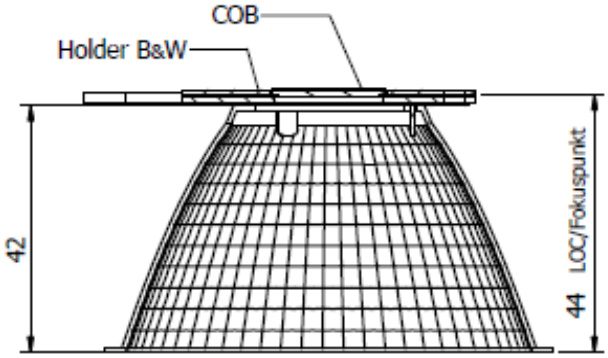


## Mögliche Halter / COB Kombinationen / Holder / COB combinations Jordan Serie 75

| COB Hersteller<br>COB Supplier | COB Typ<br>COB Type | Halter<br>Holder | Reflektor<br>Reflector |
|---|---|---|---|
| Nichia | NV..S007Z / NF..T012B | 452 Typ Z1 | 11xxxxS03101 |
| Nichia | NF..S024B / NT..S024B | 452 Typ Z1 | 11xxxxS03101 |
| Nichia | NJ..S024Z | 452 Typ Z1 | 11xxxxS03101 |
| Nichia | NV..L016Z / NV..L024Z | 438 Typ Z1 | 11xxxxS03101 |
| Nichia | NF..L036B / NF..L048B | 438 Typ Z1 | 11xxxxS03101 |
| Nichia | NF..L060B | 438 Typ Z1 | 11xxxxS03101 |
| Nichia | NV..J048Z / NF..J108B | 463 Typ Z1 | 11xxxxS03101 |
| Nichia | NF..J130B | 463 Typ Z1 | 11xxxxS03101 |
| Nichia | NJCWL024Z Tunable | 497 Typ Z1 HV | 11xxxxS03101 |
| Nichia | NVCWJ024Z Tunable | 498 Typ Z1 HV | 11xxxxS03101 |

KHATOD® Optical Solutions for LED Lighting

**COSMO**

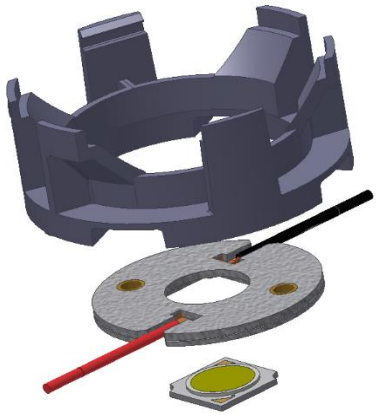

| | |
|---|---|
| **Khatod Linse**<br>Khatod lenses | PLL 2010.. 50mm<br>PLL 2009.. 70mm<br>PLL 2008.. 90mm |
| **Hersteller Webseite**<br>Manufacturer website | www.khatod.com |
| **LED Halter B+W**<br>LED Holder B+W | 4xx / Typ K3 (PLL2010)<br>4xx / Typ Z1 (PLL2008/9) |

4xx Typ K3

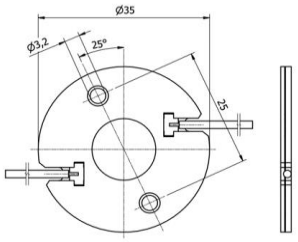


4xx Typ Z1

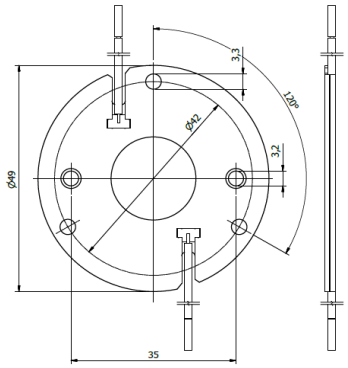


KEL 2010
lense holder for PLL2010

KEL2009
lense holder for PLL2009

KEL 2008
lense holder for PLL2008

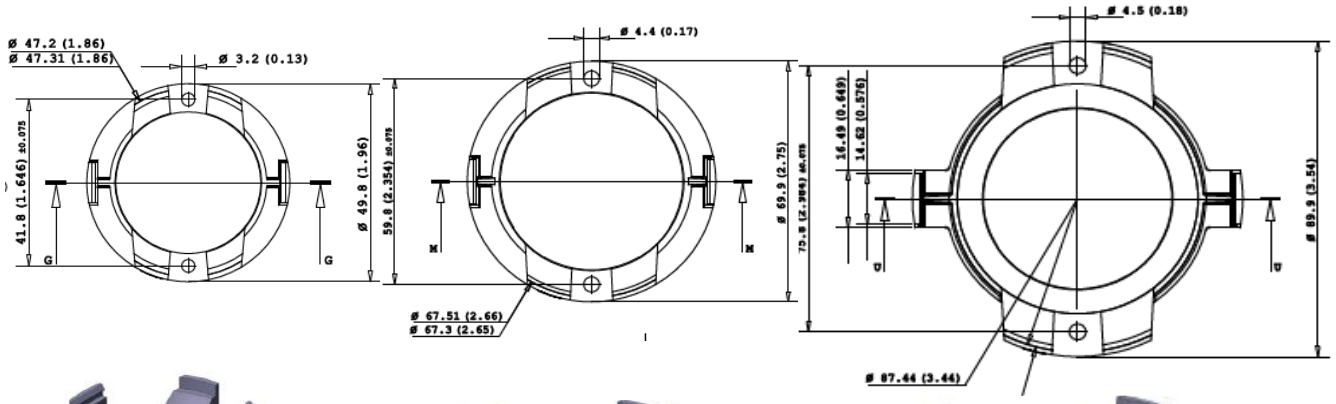


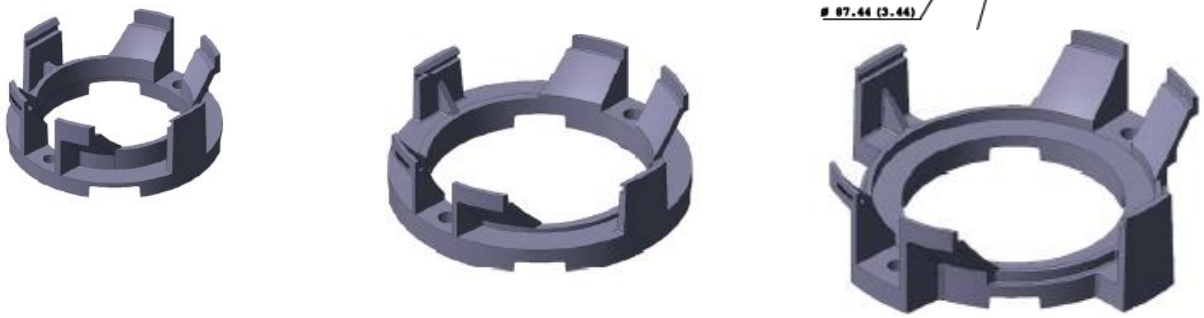

## Mögliche Halter / COB Kombinationen / Holder / COB combinations Khatod Cosmo

| COB Hersteller<br>COB Supplier | COB Typ<br>COB Type | Halter<br>Holder | Linse<br>Lense |
|---|---|---|---|
| Nichia | NV..S007Z / NF..T012B | 452 Typ K3 | PLL2010.. + KEL2010 50mm |
| Nichia | NF..S024B / NT..S024B | 452 Typ K3 | PLL2010.. + KEL2010 50mm |
| Nichia | NJ..S024Z | 452 Typ K3 | PLL2010.. + KEL2010 50mm |
| Nichia | NV..L016Z / NV..L024Z | 438 Typ K3 | PLL2010.. + KEL2010 50mm |
| Nichia | NV..J048Z / NF..J108B | 463 Typ Z1 | PLL2009.. + KEL2009 70mm |
| Nichia | NF..J130B | 463 Typ Z1 | PLL2009.. + KEL2009 70mm |
| Nichia | NJNWS012Z Tunable | 495 Typ K3 HV | PLL2010.. + KEL2010 50mm |
| Nichia | NJCWL024Z Tunable | 497 Typ K3 HV | PLL2010.. + KEL2010 50mm |

KHATOD® Optical Solutions for LED Lighting

## EASY reflector system

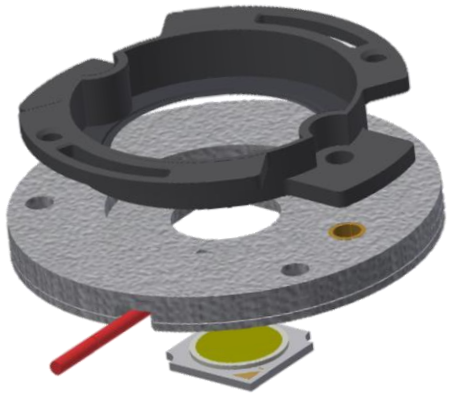

| | |
|---|---|
| **Khatod Reflektor**<br>Khatod reflector | KCLP 1856 / 1857<br>KCLP 1858<br>KCLP 1859 |
| **Hersteller Webseite**<br>Manufacturer website | www.khatod.com |
| **LED Halter B+W**<br>LED Holder B+W | 4xx / Typ Z2<br>4xx / Typ Z3 |

4xx Typ Z2

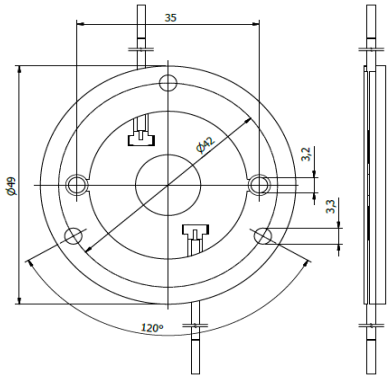


4xx Typ Z3

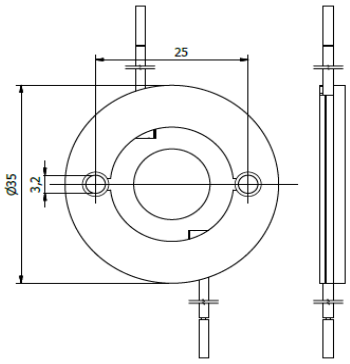


KCLP1856/1857
50mm reflector

KCLP1858
72mm reflector

KCLP1859
110 mm reflector

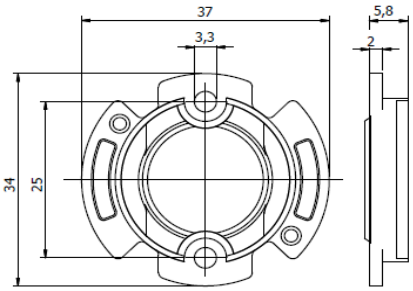


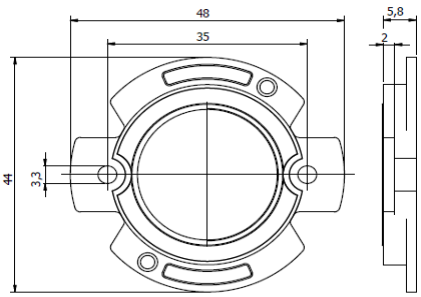


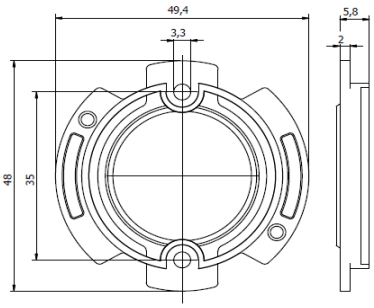


**Mögliche Halter / COB Kombinationen / Holder / COB combinations** **Khatod Easy**

| COB Hersteller<br>COB Supplier | COB Typ<br>COB Type | Halter<br>Holder | Reflektor<br>Reflector |
|---|---|---|---|
| **Nichia** | **NV..S007Z / NF..T012B** | **452 Typ Z3** | **KCLP 1856 / 1857 (50mm)** |
| **Nichia** | **NF..S024B / NT..S024B** | **452 Typ Z3** | **KCLP 1856 / 1857 (50mm)** |
| **Nichia** | **NJ..S024Z** | **452 Typ Z3** | **KCLP 1856 / 1857 (50mm)** |
| **Nichia** | **NV..L016Z / NV..L024Z** | **438 Typ Z3** | **KCLP 1856 / 1857 (50mm)** |
| **Nichia** | **NV..J048Z / NF..J108B** | **463 Typ Z2** | **KCLP 1858 (72mm)** |

## Mögliche Halter / COB Kombinationen / Holder / COB combinations Khatod Easy

| COB Hersteller<br>COB Supplier | COB Typ<br>COB Type | Halter<br>Holder | Reflektor<br>Reflector |
|---|---|---|---|
| Nichia | NF..J130B | 463 Typ Z2 | KCLP 1858 (72mm) |
| Nichia | NJNWS012Z Tunable | 495 Typ Z3 HV | KCLP 1856 / 1857 (50mm) |
| Nichia | NJCWL024Z Tunable | 497 Typ Z3 HV | KCLP 1856 / 1857 (50mm) |

KHATOD®
Optical Solutions for LED Lighting

**EASY**
**reflector system**
**Asymmetric**

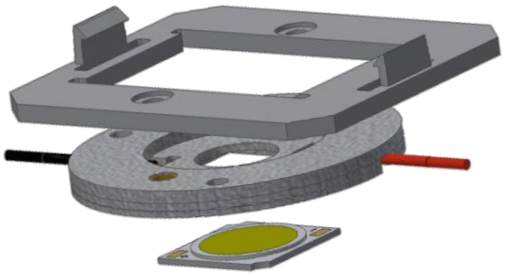

**Khatod Adapter**
Khatod adaptor
KCLP 1799

**Hersteller Webseite**
Manufacturer website
www.khatod.com

**LED Halter B+W**
LED Holder B+W
4xx / Typ Z2

4xx Typ Z2

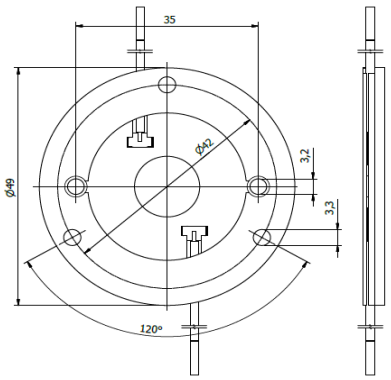


KCLP 1799

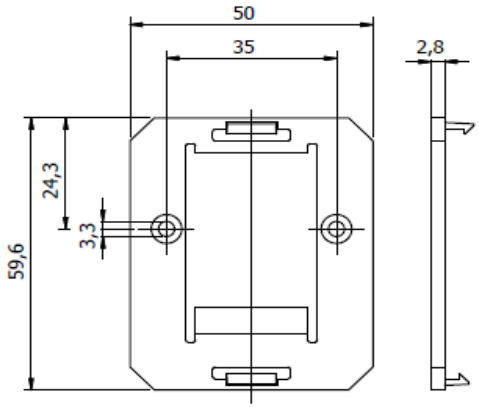


**Mögliche Halter / COB Kombinationen / Holder / COB combinations** **Khatod Easy asym.**

| COB Hersteller<br>COB Supplier | COB Typ<br>COB Type | Halter<br>Holder | Reflektor<br>Reflector |
|---|---|---|---|
| Nichia | NV..L016Z / NV..L024Z | 438 Typ Z2 | KCLP 1799 |
| Nichia | NF..L036B / NF..L048B | 438 Typ Z2 | KCLP 1799 |
| Nichia | NF..L060B | 438 Typ Z2 | KCLP 1799 |
| Nichia | NV..J048Z / NF..J108B | 463 Typ Z2 | KCLP 1799 |
| Nichia | NF..J130B | 463 Typ Z2 | KCLP 1799 |
| Nichia | NVCWJ024Z Tunable | 498 Typ Z2 HV | KCLP 1799 |

KHATOD® Optical Solutions for LED Lighting

## PL50SIL Silicone Lense

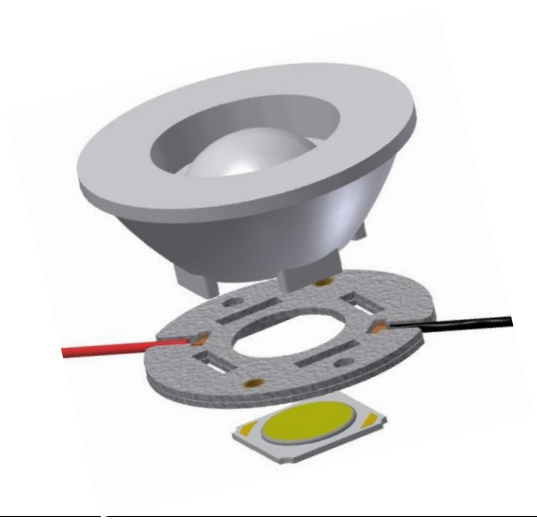

**Khatod Linse**
Khatod lense — PL50SIL

**Hersteller Webseite**
Manufacturer website — www.khatod.com

**LED Halter B+W**
LED Holder B+W — 4xx / Typ K2

4xx Typ K2

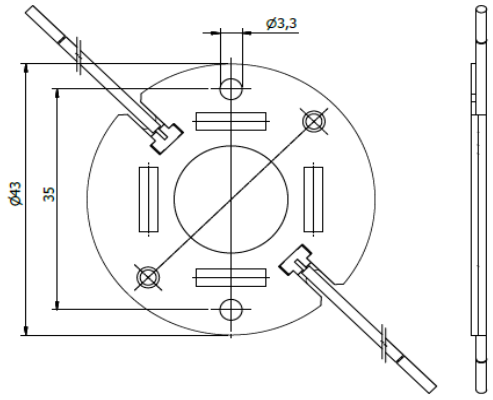


PL50SIL

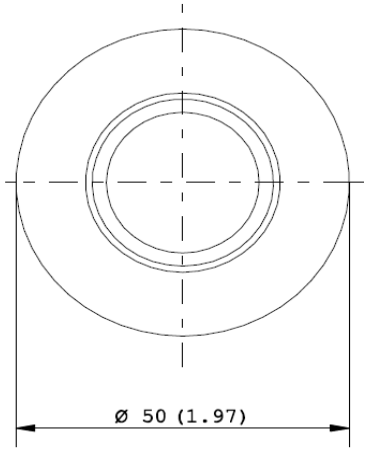


**Mögliche Halter / COB Kombinationen / Holder / COB combinations** **Khatod PL50SIL**

| COB Hersteller<br>COB Supplier | COB Typ<br>COB Type | Halter<br>Holder | Linse<br>Lense |
|---|---|---|---|
| Nichia | NV..S007Z / NF..T012B | 452 Typ K2 | PL50SIL |
| Nichia | NF..S024B / NT..S024B | 452 Typ K2 | PL50SIL |
| Nichia | NJ..S024Z | 452 Typ K2 | PL50SIL |
| Nichia | NV..L016Z / NV..L024Z | 438 Typ K2 | PL50SIL |
| Nichia | NF..L036B / NF..L048B | 438 Typ K2 | PL50SIL |
| Nichia | NF..L060B | 438 Typ K2 | PL50SIL |
| Nichia | NJNWS012Z Tunable | 495 Typ K2 HV | PL50SIL |
| Nichia | NJCWL024Z Tunable | 497 Typ K2 HV | PL50SIL |

KHATOD® Optical Solutions for LED Lighting

## SiO3
## SiO3 Junior

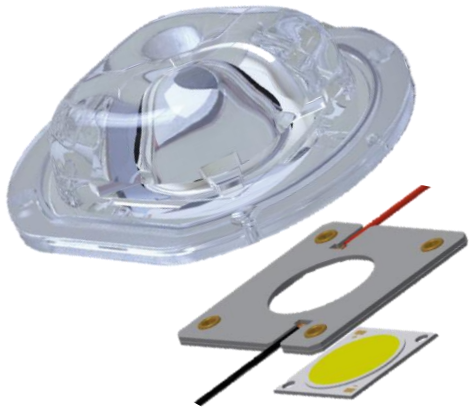

**Khatod Linse**
Khatod lense

Khatod partnumbers

**Hersteller Webseite**
Manufacturer website

www.khatod.com

**LED Halter B+W**
LED Holder B+W

4xx / Typ K1

4xx Typ K1

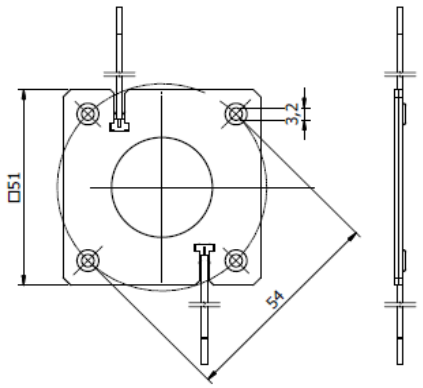

**Mögliche Halter / COB Kombinationen / Holder / COB combinations** **Khatod SiO3**

| COB Hersteller<br>COB Supplier | COB Typ<br>COB Type | LES<br>LES | Halter<br>Holder | Linse<br>Lense |
|---|---|---|---|---|
| Nichia | NV..L016Z / NV..L024Z | 9 mm | 438 Typ K1 | see Khatod website |
| Nichia | NF..L036B / NF..L048B | 12 mm | 438 Typ K1 | see Khatod website |
| Nichia | NF..L060B | 12 mm | 438 Typ K1 | see Khatod website |
| Nichia | NV..J048Z / NF..J108B | 15 mm | 463 Typ K1 | see Khatod website |
| Nichia | NF..J130B | 15 mm | 463 Typ K1 | see Khatod website |
| Nichia | NVCWJ024Z Tunable | 11 mm | 498 Typ K1 HV | see Khatod website |

KHATOD® Optical Solutions for LED Lighting

## SIR50 Silicone Lense

| | |
|---|---|
| **Khatod Linse**<br>Khatod lense | SIR50 |
| **Hersteller Webseite**<br>Manufacturer website | www.khatod.com |
| **LED Halter B+W**<br>LED Holder B+W | 4xx / Typ K3 |

4xx Typ K3

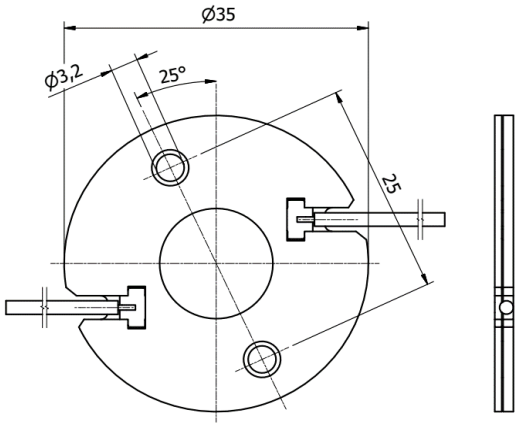


SIR50

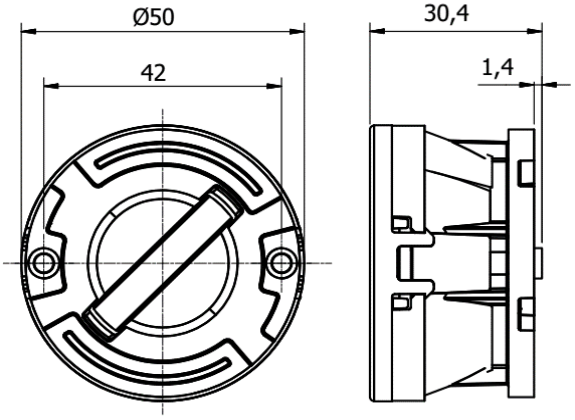


**Mögliche Halter / COB Kombinationen / Holder / COB combinations** **Khatod SIR50**

| COB Hersteller<br>COB Supplier | COB Typ<br>COB Type | Halter<br>Holder | Linse<br>Lense |
|---|---|---|---|
| Nichia | NV..S007Z / NF..T012B | 452 Typ K3 | KEPLL1994… |
| Nichia | NF..S024B / NT..S024B | 452 Typ K3 | KEPLL1994… |
| Nichia | NJ..S024Z | 452 Typ K3 | KEPLL1994… |
| Nichia | NV..L016Z / NV..L024Z | 438 Typ K3 | KEPLL1994… |
| Nichia | NJNWS012Z Tunable | 495 Typ K3 HV | KEPLL1994… |
| Nichia | NJCWL024Z Tunable | 497 Typ K3 HV | KEPLL1994… |

LEDiL®

™2X2mx

**2x2MX System**

**LEDiL® and 2X2MX are registered trademarks of Ledil Oy in the European Union, the U.S.A and certain other countries.**

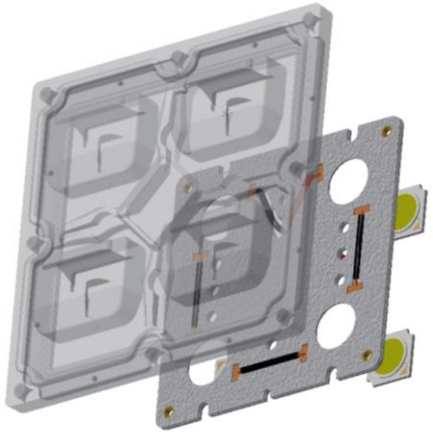

| | |
|---|---|
| **LEDiL Optik**<br>LEDiL optics | STRADA 2x2MX<br>STRADA 2x2MXS |
| **Hersteller Webseite**<br>Manufacturer website | www.ledil.com |
| **LED Halter B+W**<br>LED Holder B+W | 4xx / Typ 2x2MX HV |

Holder 4xx Type 2x2MX HV

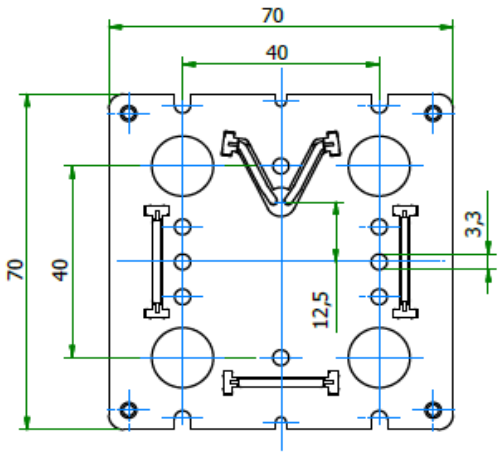


e.g. LEDiL Strada 2x2MXS DWC2

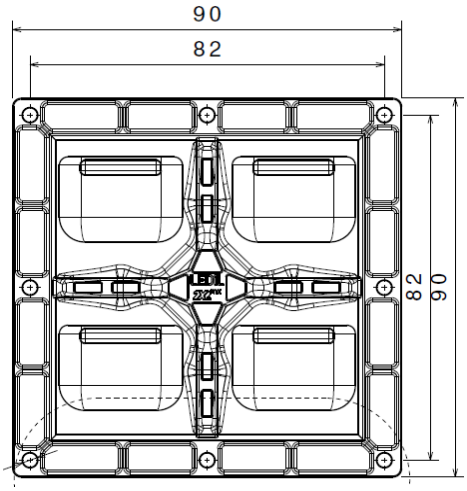


**Passende Kühlkörper** / Suitable heat sinks:

MechaTronix

**CoolBlock SQ**
**CoolBeam SQ**

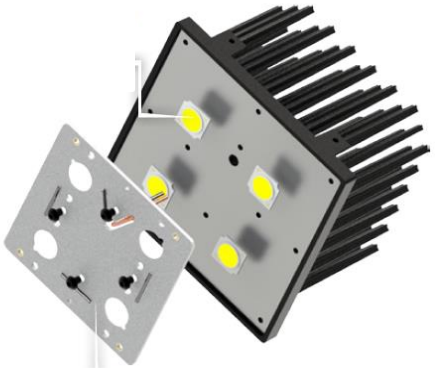

| | |
|---|---|
| **MechaTronix Cooler**<br>MechaTronix Cooler | CoolBlock SQ-01 |
| **Hersteller Webseite**<br>Manufacturer website | www.led-heatsink.com |

**Die dargestellten Halterlösungen sind Mehrfachhalter, bei denen die COBs im Halter in Serie geschaltet werden. Daher muss bei Serienschaltungen von mehreren Modulen die gesamte Vorwärtsspannung betrachtet werden**.
The described holder solution is a multiple COB holder where all COBs are prewired in a serial connection. Therefore the total forward voltage maybe critical if holders are connected in series.

| COB forward Voltage **36 V** (Standard) | | COB forward Voltage **18 V** (special versions like Citizen CLU028 0604 or CREE 1512 available ) | |
|---|---|---|---|
| holder rated voltage **150V DC** | holder rated voltage **450V DC** by using **insulating TIM** | holder rated voltage **150V DC** | holder rated voltage **450V DC** by using **insulating TIM** |
| **single** use only | up to **2 holders** in series | up to **2 holders** in series | up to **4 holders** in series |

**Die max. Ausgangsspannung des LED Treibers kann eine Veränderung der o.g. Anordnung zur Folge haben und muss daher überprüft werden.**
The max output voltage may have an influence on the proposal above and need to be checked.

## Mögliche Halter / COB Kombinationen / Holder / COB combinations 2x2MX System

| COB Hersteller<br>COB Supplier | COB Typ<br>COB Type | Halter<br>Holder | Adapter<br>Base part |
|---|---|---|---|
| **Nichia** | **NV..S007Z / NF..T012B** | **452 Typ 2x2MX HV** | **see LEDiL website** |
| **Nichia** | **NF..S024B / NT..S024B** | **452 Typ 2x2MX HV** | **see LEDiL website** |
| **Nichia** | **NJ..S024Z** | **452 Typ 2x2MX HV** | **see LEDiL website** |
| **Nichia** | **NJNWS012Z Tunable** | **495 Typ 2x2MX HV HV** | **see LEDiL website** |

LEDiL®

**CLAMP System**
**(3 Hook)**

| | |
|---|---|
| **Passende LEDiL Optik**<br>**Suitable** LEDiL optics | **ANGELA**<br>**ANGELETTE**<br>**ANGELINA**<br>**MOLLY**<br>**RONDA** |
| **LEDiL Adapter**<br>LEDiL adaptor | C13658_CLAMP-VERO13-18<br>C13584_CLAMP-VERO29 |
| **Hersteller Webseite**<br>Manufacturer website | www.ledil.com |
| **LED Halter B+W**<br>LED Holder B+W | 4xx / Typ L1<br>4xx / Typ L2<br>4xx / Typ L3 |

4xx Typ L1

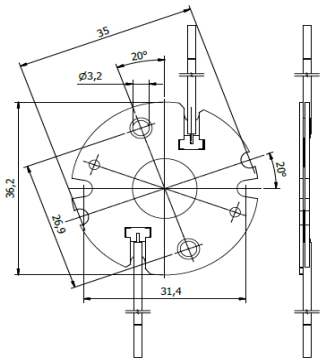


4xx Typ L2

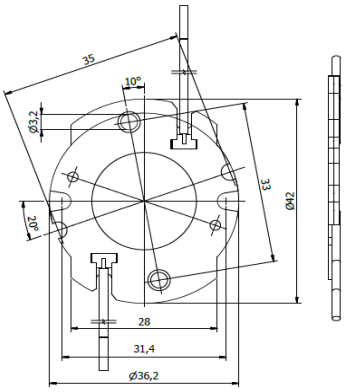


C13658_CLAMP-VERO13-18

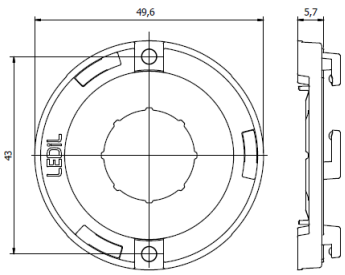


4xx Typ L3

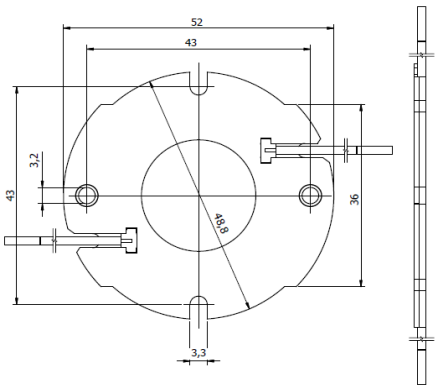


C13584_CLAMP-VERO29

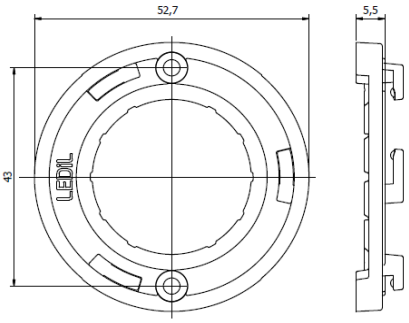

## Mögliche Halter / COB Kombinationen / Holder / COB combinations LEDiL Clamp System

| COB Hersteller<br>COB Supplier | COB Typ<br>COB Type | LES<br>LES | Halter<br>Holder | Adapter<br>Base part |
|---|---|---|---|---|
| Nichia | NV..L016Z / NV..L024Z | 9 mm | 438 Typ L1 | C13658_CLAMP-VERO13-18 |
| Nichia | NF..L036B / NF..L048B | 12 mm | 438 Typ L1 | C13658_CLAMP-VERO13-18 |
| Nichia | NF..L060B | 12 mm | 438 Typ L1 | C13658_CLAMP-VERO13-18 |
| Nichia | NV..J048Z / NF..J108B | 15 mm | 463 Typ L2 | C13658_CLAMP-VERO13-18 |
| Nichia | NF..J130B | 15 mm | 463 Typ L2 | C13658_CLAMP-VERO13-18 |
| Nichia | NVCWJ024Z Tunable | 11 mm | 498 Typ L2 HV | C13658_CLAMP-VERO13-18 |

| LEDiL® | HEKLA System |
|---|---|
| **Passende LEDiL Optik**<br>Suitable LEDiL optics | **BARBARA-G2**<br>**BROOKE / MIRELLA -G2**<br>**ADELIA 50/70/110**<br>**CARMEN 50/70**<br>**ZORYA, RONDA, WINNIE**<br>**AMY / AMY ZOOM 50/70**<br>**YASMEEN / Y.ZOOM 50/70**<br>**ILONA / ILONA ZOOM** |
| **LEDiL Adapter**<br>LEDiL adaptor | C16142_HEKLA-SOCKET-K |
| **Hersteller Webseite**<br>Manufacturer website | www.ledil.com |
| **LED Halter B+W**<br>LED Holder B+W | 4xx / Typ L8 |

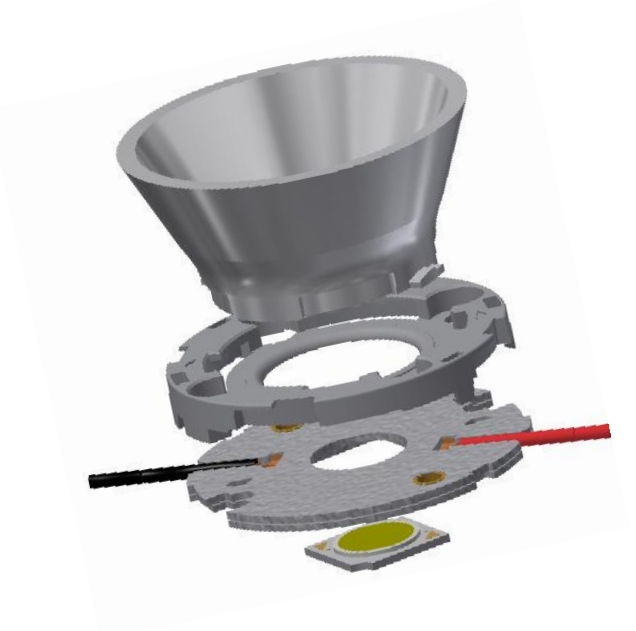

e.g. solution with BROOKE-G2 reflector

4xx Type L8
(eg. 489 Type L8 for Tunable COBs)

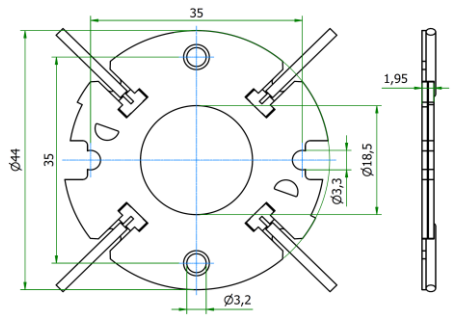


C16142 Hekla Socket K

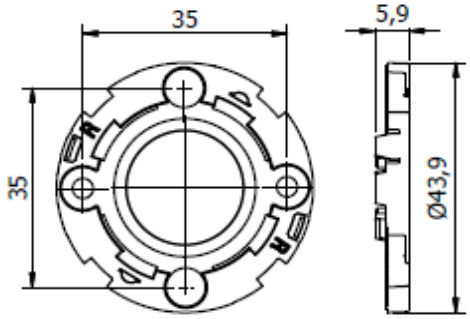

## Mögliche Halter / COB Kombinationen / Holder / COB combinations LEDiL Hekla System

| COB Hersteller<br>COB Supplier | COB Typ<br>COB Type | LES<br>LES | Halter<br>Holder | Adapter<br>Base part |
|---|---|---|---|---|
| Nichia | NV..S007Z / NF..T012B | 7,0 mm | 452 Typ L8 | C16142_HEKLA-SOCKET-K |
| Nichia | NF..S024B / NT..S024B | 7,0 mm | 452 Typ L8 | C16142_HEKLA-SOCKET-K |
| Nichia | NJ..S024Z | 7,0 mm | 452 Typ L8 | C16142_HEKLA-SOCKET-K |
| Nichia | NV..L016Z / NV..L024Z | 8,9 mm | 438 Typ L8 | C16142_HEKLA-SOCKET-K |
| Nichia | NF..L036B / NF..L048B | 11,5 mm | 438 Typ L8 | C16142_HEKLA-SOCKET-K |
| Nichia | NF..L060B | 11,5 mm | 438 Typ L8 | C16142_HEKLA-SOCKET-K |
| Nichia | NV..J048Z / NF..J108B | 14,6 mm | 463 Typ L8 | C16142_HEKLA-SOCKET-K |
| Nichia | NF..J130B | 14,6 mm | 463 Typ L8 | C16142_HEKLA-SOCKET-K |
| Nichia | NJNWS012Z Tunable | 5,9 mm | 495 Typ L8 HV | C16142_HEKLA-SOCKET-K |
| Nichia | NJCWL024Z Tunable | 7,0 mm | 497 Typ L8 HV | C16142_HEKLA-SOCKET-K |
| Nichia | NVCWJ024Z Tunable | 11,0 mm | 498 Typ L8 HV | C16142_HEKLA-SOCKET-K |

LEDiL®

**LENA**
**LENINA**

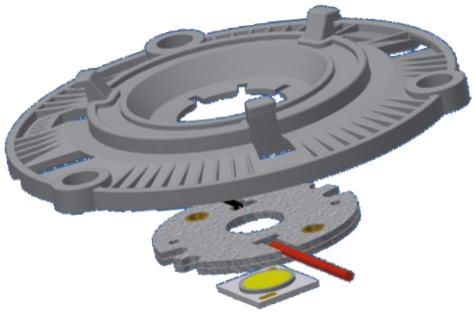

| | |
|---|---|
| **LEDiL Adapter**<br>LEDiL adaptor | C13868_LENA-STD-BASE-VERO13-18<br>C13867_LENA-STD-BASE-VERO29 |
| **Hersteller Webseite**<br>Manufacturer website | www.ledil.com |
| **LED Halter B+W**<br>LED Holder B+W | 4xx / Typ L1<br>4xx / Typ L2<br>4xx / Typ L3 |

4xx Typ L1

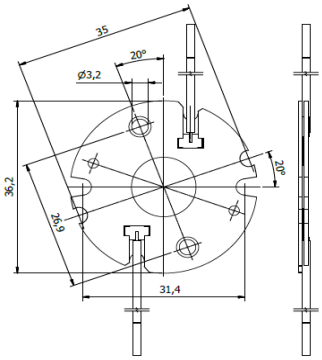


4xx Typ L2

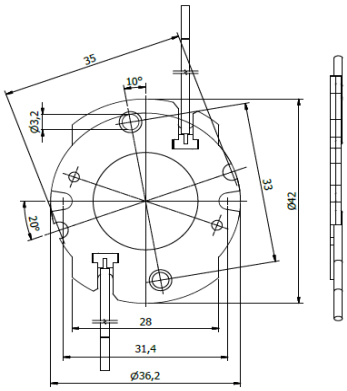


C13868_LENA-STD-BASE-VERO13-18

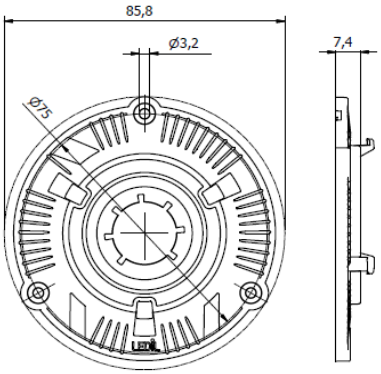


4xx Typ L3

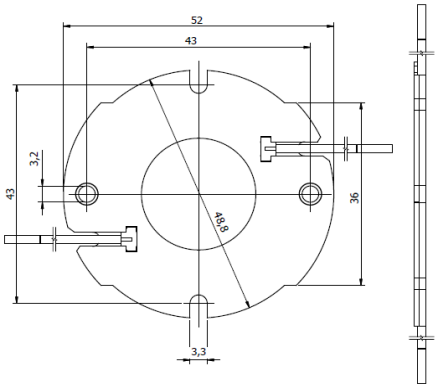


C13867_LENA-STD-BASE-VERO29

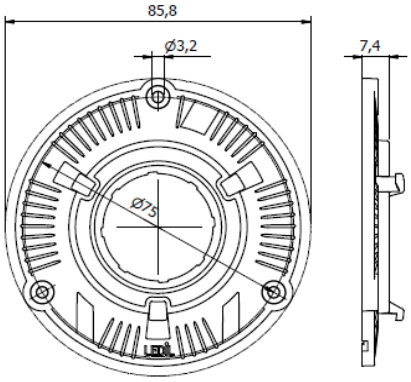


## Mögliche Halter / COB Kombinationen / Holder / COB combinations LEDiL Lena

| COB Hersteller<br>COB Supplier | COB Typ<br>COB Type | Halter<br>Holder | Adapter<br>Base part |
|---|---|---|---|
| Nichia | NF..L036B / NF..L048B | 438 Typ L1 | C13868_LENA-STD-BASE-VERO13-18 |
| Nichia | NF..L060B | 438 Typ L1 | C13868_LENA-STD-BASE-VERO13-18 |
| Nichia | NV..J048Z / NF..J108B | 463 Typ L2 | C13868_LENA-STD-BASE-VERO13-18 |
| Nichia | NF..J130B | 463 Typ L2 | C13868_LENA-STD-BASE-VERO13-18 |
| Nichia | NVCWJ024Z Tunable | 498 Typ L2 HV | C13868_LENA-STD-BASE-VERO13-18 |

LEDiL®

**PF-SOCKET SYSTEM**

| | |
|---|---|
| **Passende LEDiL Optik**<br>Suitable LEDiL optics | **BARBARA**<br>**MIRELLA** |
| **LEDiL Adapter**<br>LEDiL adaptor | C13709_PF-SOCKET-VERO13-18 |
| **Hersteller Webseite**<br>Manufacturer website | www.ledil.com |
| **LED Halter B+W**<br>LED Holder B+W | 4xx / Typ L1<br>4xx / Typ L2 |

MIRELLA
LES: max 14,5mm

BARBARA
LES: max 14,5mm

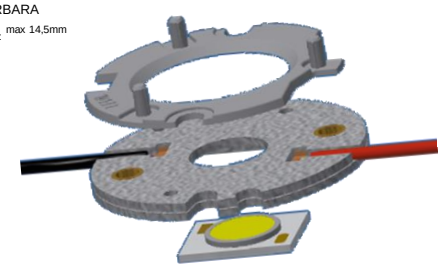

**Für BARBARA-G2 und MIRELLA-G2 ist die passende Lösung unter LEDiL HEKLA aufgeführt**
Take care that BARBARA-G2 and MIRELLA-G2 requieres a different solution available under LEDiL HEKLA

4xx Typ L1

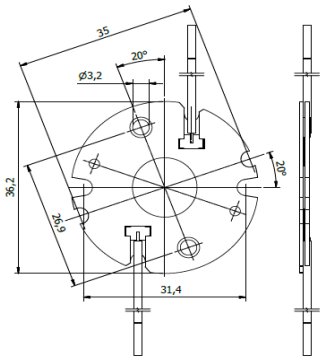


4xx Typ L2

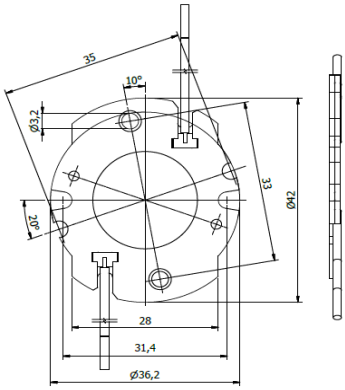


C13709_PF-SOCKET-VERO13-18

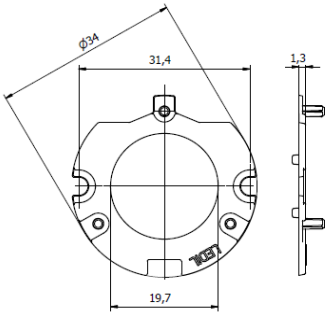


**Mögliche Halter / COB Kombinationen / Holder / COB combinations LEDiL PF-Socket**

| COB Hersteller<br>COB Supplier | COB Typ<br>COB Type | LES<br>LES | Halter<br>Holder | Adapter<br>Base part |
|---|---|---|---|---|
| Nichia | NV..S007Z / NF..T012B | 7 mm | 452 Typ L1 | C13709_PF-SOCKET-VERO13-18 |
| Nichia | NF..S024B / NT..S024B | 7 mm | 452 Typ L1 | C13709_PF-SOCKET-VERO13-18 |
| Nichia | NJ..S024Z | 7 mm | 452 Typ L1 | C13709_PF-SOCKET-VERO13-18 |
| Nichia | NV..L016Z / NV..L024Z | 9 mm | 438 Typ L1 | C13709_PF-SOCKET-VERO13-18 |
| Nichia | NF..L036B / NF..L048B | 12 mm | 438 Typ L1 | C13709_PF-SOCKET-VERO13-18 |
| Nichia | NF..L060B | 12 mm | 438 Typ L1 | C13709_PF-SOCKET-VERO13-18 |
| Nichia | NV..J048Z / NF..J108B | 15 mm | 463 Typ L2 | C13709_PF-SOCKET-VERO13-18 |
| Nichia | NF..J130B | 15 mm | 463 Typ L2 | C13709_PF-SOCKET-VERO13-18 |

## Mögliche Halter / COB Kombinationen / Holder / COB combinations LEDiL PF-Socket

| COB Hersteller<br>COB Supplier | COB Typ<br>COB Type | LES<br>LES | Halter<br>Holder | Adapter<br>Base part |
|---|---|---|---|---|
| Nichia | NJNWS012Z Tunable | 6 mm | 495 Typ L1 HV | C13709_PF-SOCKET-VERO13-18 |
| Nichia | NJCWL024Z Tunable | 7 mm | 497 Typ L1 HV | C13709_PF-SOCKET-VERO13-18 |
| Nichia | NVCWJ024Z Tunable | 11 mm | 498 Typ L2 HV | C13709_PF-SOCKET-VERO13-18 |

LEDiL®

**SAGA**

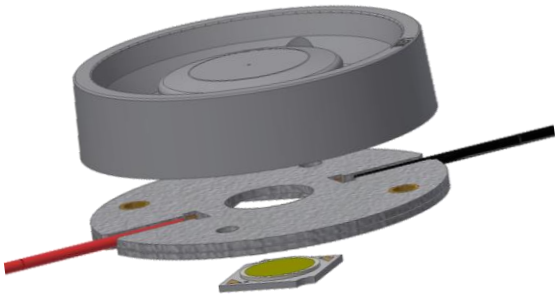

**LEDiL Linse**
LEDiL lense

CN13990_SAGA-HB-IP-WHT
FCA14933_SAGA-S-WHT

**Hersteller Webseite**
Manufacturer website

www.ledil.com

**LED Halter B+W**
LED Holder B+W

4xx / Typ L6

4xx Typ L6

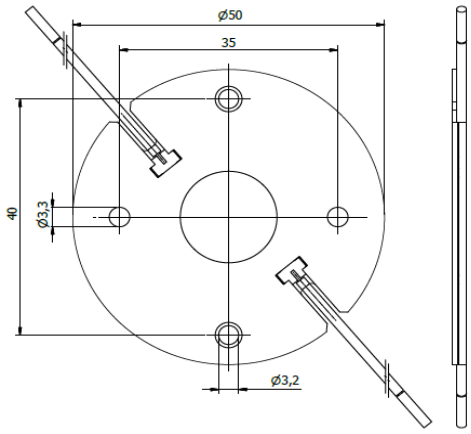


CN13990_SAGA-HB-IP-WHT

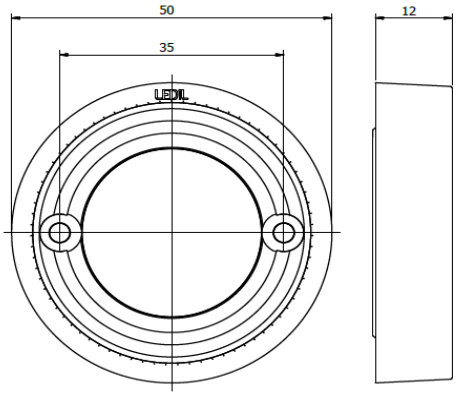


**Mögliche Halter / COB Kombinationen / Holder / COB combinations LEDiL Saga**

| COB Hersteller<br>COB Supplier | COB Typ<br>COB Type | Halter<br>Holder | Linse<br>Lense |
|---|---|---|---|
| Nichia | NV..S007Z / NF..T012B | 452 Typ L6 | CN13990_SAGA-HB-IP-WHT |
| Nichia | NF..S024B / NT..S024B | 452 Typ L6 | CN13990_SAGA-HB-IP-WHT |
| Nichia | NJ..S024Z | 452 Typ L6 | CN13990_SAGA-HB-IP-WHT |
| Nichia | NV..L016Z / NV..L024Z | 438 Typ L6 | CN13990_SAGA-HB-IP-WHT |
| Nichia | NF..L036B / NF..L048B | 438 Typ L6 | CN13990_SAGA-HB-IP-WHT |
| Nichia | NF..L060B | 438 Typ L6 | CN13990_SAGA-HB-IP-WHT |
| Nichia | NV..J048Z / NF..J108B | 463 Typ L6 | CN13990_SAGA-HB-IP-WHT |
| Nichia | NF..J130B | 463 Typ L6 | CN13990_SAGA-HB-IP-WHT |
| Nichia | NJNWS012Z Tunable | 495 Typ L6 HV | CN13990_SAGA-HB-IP-WHT |
| Nichia | NJCWL024Z Tunable | 497 Typ L6 HV | CN13990_SAGA-HB-IP-WHT |
| Nichia | NVCWJ024Z Tunable | 498 Typ L6 HV | CN13990_SAGA-HB-IP-WHT |

LEDiL®

**STELLA**
**(Type L1)**

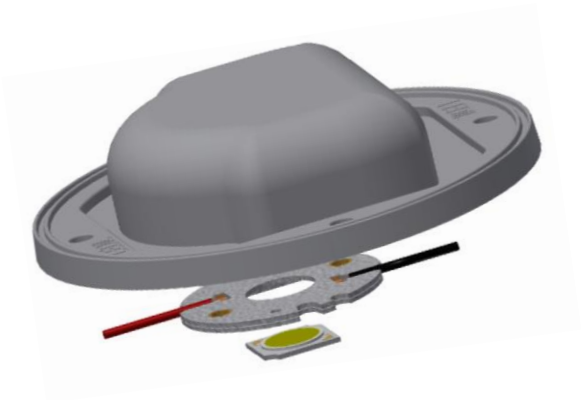

| | |
|---|---|
| **Passende LEDiL Optik**<br>Suitable LEDiL optics | **STELLA-A**<br>LEDiL part numbers |
| **Hersteller Webseite**<br>Manufacturer website | www.ledil.com |
| **LED Halter B+W**<br>LED Holder B+W | 4xx / Typ L1 |

4xx Typ L1

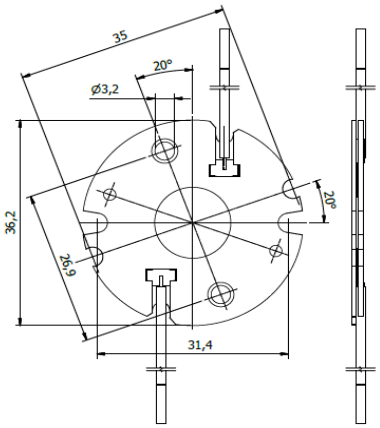


STELLA-A

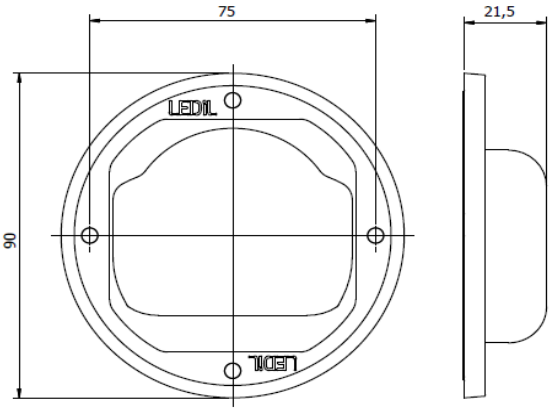


**Mögliche Halter / COB Kombinationen / Holder / COB combinations** **LEDiL Stella (L1)**

| COB Hersteller<br>COB Supplier | COB Typ<br>COB Type | Halter<br>Holder | Linse<br>Lense |
|---|---|---|---|
| Nichia | NV..L016Z / NV..L024Z | 438 Typ L1 | FN13323_STELLA-A |
| Nichia | NF..L036B / NF..L048B | 438 Typ L1 | FN13323_STELLA-A |
| Nichia | NF..L060B | 438 Typ L1 | FN13323_STELLA-A |

| | |
|---|---|
| LEDiL® | **STELLA (Type L4)** |
| **Passende LEDiL Optik**<br>Suitable LEDiL optics | **STELLA-HB**<br>**STELLA-HB-WWW**<br>**STELLA-FRESNEL**<br>**STELLA-RS**<br>**STELLA-G2-VSM**<br>LEDiL part numbers |
| **Hersteller Webseite**<br>Manufacturer website | www.ledil.com |
| **LED Halter B+W**<br>LED Holder B+W | 4xx / Typ L4 |

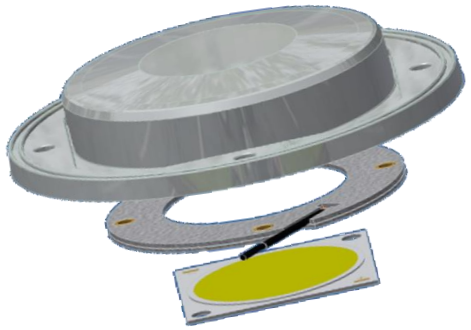

4xx / Typ L4

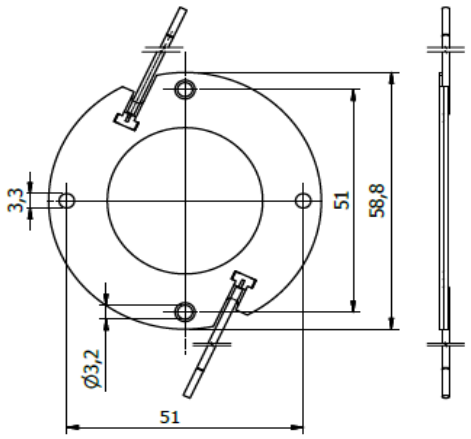


eg. STELLA-HB

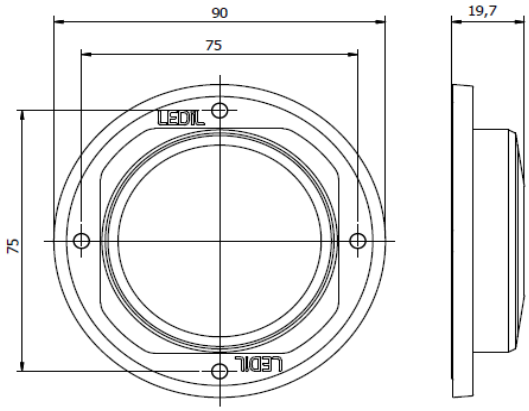


**Mögliche Halter / COB Kombinationen / Holder / COB combinations** **LEDiL STELLA (L4)**

| COB Hersteller<br>COB Supplier | COB Typ<br>COB Type | Halter<br>Holder | Linse<br>Lense |
|---|---|---|---|
| **Nichia** | **NF..H306B** | **488 Typ L4 HV** | **see LEDiL website** |

LEDiL®

**STELLA (Type Z1)**

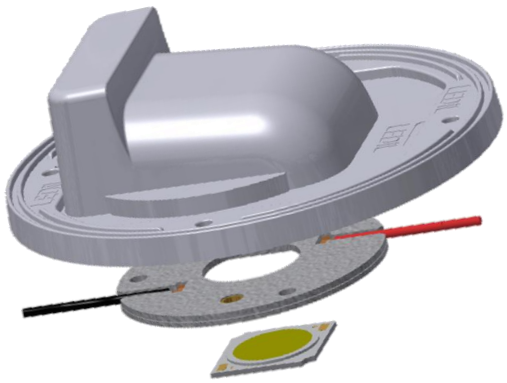

| | |
|---|---|
| **Passende LEDiL Optik**<br>Suitable LEDiL optics | **STELLA-T4**<br>**STELLA-VSM**<br>**STELLA-DWC2**<br>**STELLA-G2-T2**<br>**STELLA-G2-T3**<br>**STELLA-G2-T4**<br>LEDiL part numbers |
| **Hersteller Webseite**<br>Manufacturer website | www.ledil.com |
| **LED Halter B+W**<br>LED Holder B+W | 4xx / Typ Z1 |

4xx Typ Z1

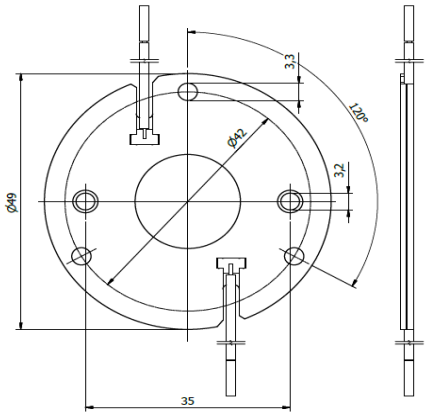


eg. STELLA-DWC2

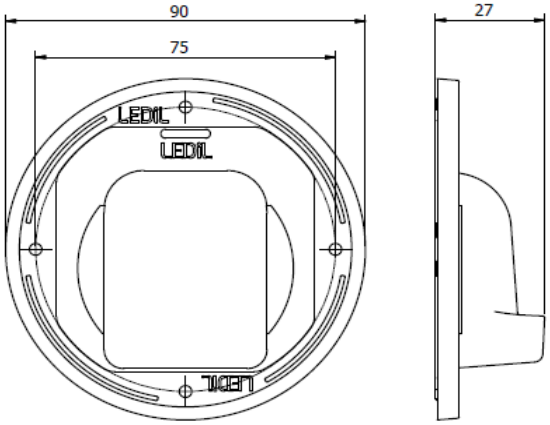


**Mögliche Halter / COB Kombinationen / Holder / COB combinations** **LEDiL STELLA (Z1)**

| COB Hersteller<br>COB Supplier | COB Typ<br>COB Type | Halter<br>Holder | Linse<br>Lense |
|---|---|---|---|
| Nichia | NV..L016Z / NV..L024Z | 438 Typ Z1 | see LEDiL website |
| Nichia | NF..L036B / NF..L048B | 438 Typ Z1 | see LEDiL website |
| Nichia | NF..L060B | 438 Typ Z1 | see LEDiL website |
| Nichia | NV..J048Z / NF..J108B | 463 Typ Z1 | see LEDiL website |
| Nichia | NF..J130B | 463 Typ Z1 | see LEDiL website |
| Nichia | NVCWJ024Z Tunable | 498 Typ Z1 HV | see LEDiL website |

LEDiL®

**WINNIE**

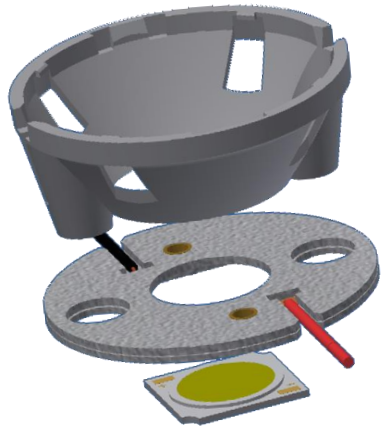

**LEDiL Linse**
LEDiL lense

LEDiL part numbers

**Hersteller Webseite**
Manufacturer website

www.ledil.com

**LED Halter B+W**
LED Holder B+W

4xx / Typ L5

**Für WINNIE-HLD_C ist die passende Lösung unter LEDiL HEKLA aufgeführt**
Take care that WINNIE-HLD-C requieres a different solution available under LEDiL HEKLA

4xx / Typ L5

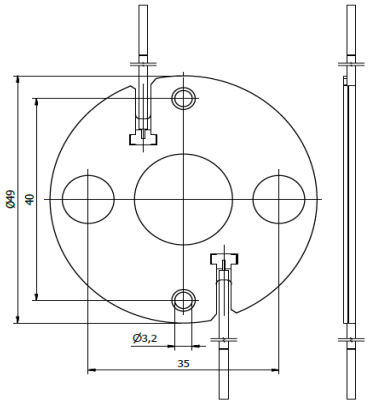


CN14xxx WINNIE-x

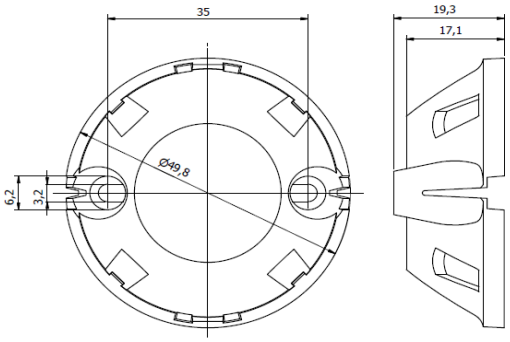


**Mögliche Halter / COB Kombinationen / Holder / COB combinations** **LEDiL WINNIE**

| COB Hersteller<br>COB Supplier | COB Typ<br>COB Type | Halter<br>Holder | Linse<br>Lense |
|---|---|---|---|
| Nichia | NV..S007Z / NF..T012B | 452 Typ L5 | see part numbers above |
| Nichia | NF..S024B / NT..S024B | 452 Typ L5 | see part numbers above |
| Nichia | NJ..S024Z | 452 Typ L5 | see part numbers above |
| Nichia | NV..L016Z / NV..L024Z | 438 Typ L5 | see part numbers above |
| Nichia | NF..L036B / NF..L048B | 438 Typ L5 | see part numbers above |
| Nichia | NF..L060B | 438 Typ L5 | see part numbers above |
| Nichia | NV..J048Z / NF..J108B | 463 Typ L5 | see part numbers above |
| Nichia | NF..J130B | 463 Typ L5 | see part numbers above |
| Nichia | NJNWS012Z Tunable | 495 Typ L5 HV | see part numbers above |
| Nichia | NJCWL024Z Tunable | 497 Typ L5 HV | see part numbers above |
| Nichia | NVCWJ024Z Tunable | 498 Typ L5 HV | see part numbers above |

LEDiL®

**ZORYA**

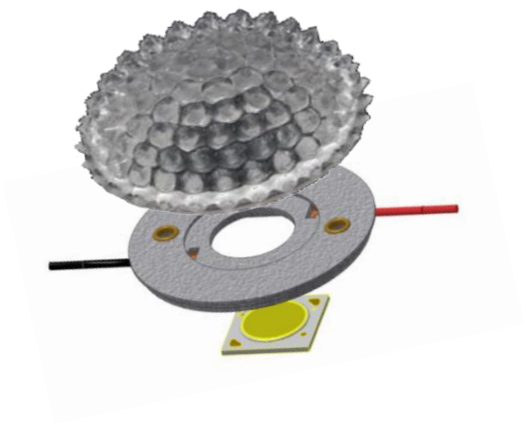

**LEDiL Linse**
LEDiL lense

F15074_ZORYA-SC

**Hersteller Webseite**
Manufacturer website

www.ledil.com

**LED Halter B+W**
LED Holder B+W

4xx / Typ L7

**Alternativ zur direkten Montage kann ZORYA auch mit dem Adapter HEKLA montiert werden.**
In addition to the direct mounting Zorya can be assembled with the LEDiL HEKLA adaptor

4xx / Typ L7

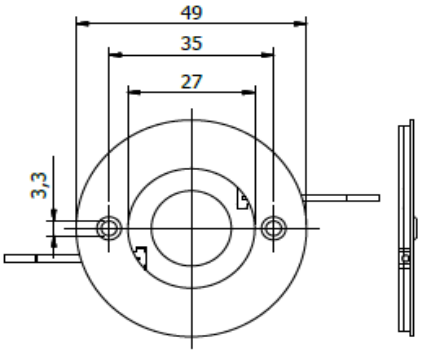


F15074_ZORYA-SC

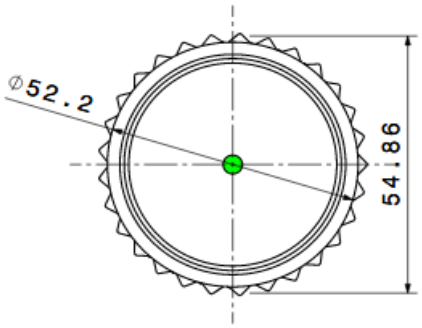


Bottom view

**Mögliche Halter / COB Kombinationen / Holder / COB combinations LEDiL ZORYA**

| COB Hersteller<br>COB Supplier | COB Typ<br>COB Type | Halter<br>Holder | Linse<br>Lense |
|---|---|---|---|
| Nichia | NV..L016Z / NV..L024Z | 438 Typ L7 | F15074_ZORYA-SC |
| Nichia | NF..L036B / NF..L048B | 438 Typ L7 | F15074_ZORYA-SC |
| Nichia | NF..L060B | 438 Typ L7 | F15074_ZORYA-SC |
| Nichia | NV..J048Z / NF..J108B | 463 Typ L7 | F15074_ZORYA-SC |
| Nichia | NF..J130B | 463 Typ L7 | F15074_ZORYA-SC |
| Nichia | NVCWJ024Z Tunable | 498 Typ L7 HV | F15074_ZORYA-SC |

| | |
|---|---|
| LedLink – Linking LEDs to The Real World | **CEW**<br>**CHQ** |
| **Ledlink Optik**<br>Ledlink optics | LL01CR-CEWxxL02<br>LL01CR-CHQxxL02 |
| **Hersteller Webseite**<br>Manufacturer website | www.ledlink-optics.com |
| **LED Halter B+W**<br>LED Holder B+W | 4xx / Typ LL1 |

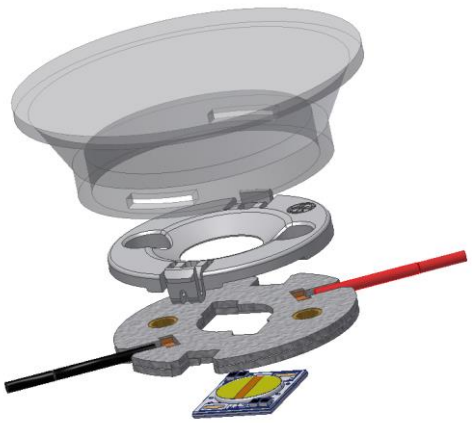

4xx Typ LL1

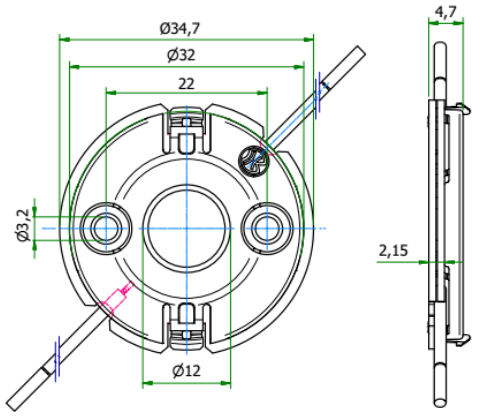


CEW series

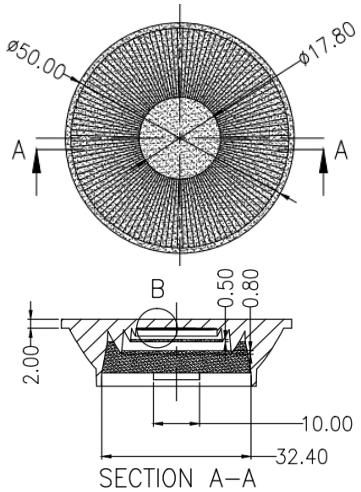


CHQ series

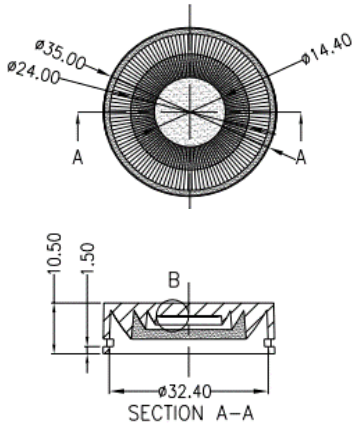


**Mögliche Halter / COB Kombinationen / Holder / COB combinations** **CEW / CHQ**

| COB Hersteller<br>COB Supplier | COB Typ<br>COB Type | Halter<br>Holder | B+W Adapter<br>B+W Adaptor |
|---|---|---|---|
| Nichia | NV..S007Z / NF..T012B | 452 Typ LL1 | 430/48993 Adaptor LL1 |
| Nichia | NF..S024B / NT..S024B | 452 Typ LL1 | 430/48993 Adaptor LL1 |
| Nichia | NJ..S024Z | 452 Typ LL1 | 430/48993 Adaptor LL1 |
| Nichia | NJNWS012Z Tunable | 495 Typ LL1 HV | 430/48993 Adaptor LL1 |

| | |
|---|---|
| Nata Reflector • Lens | **Nata M30** |
| **Nata Reflektor**<br>Nata reflector | 1687-M<br>1709-M<br>1-0788-M |
| **Hersteller Webseite**<br>Manufacturer website | www.nata.cn |
| **LED Halter B+W**<br>LED Holder B+W | 4xx / Typ N1 |

4xx Typ N1

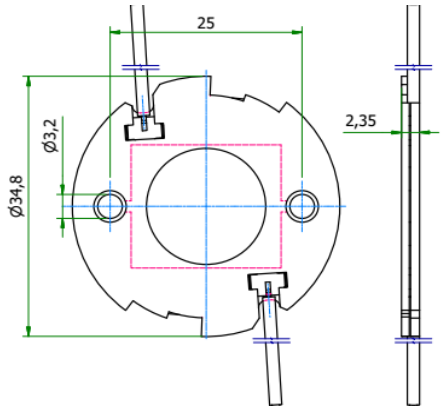


1709-M

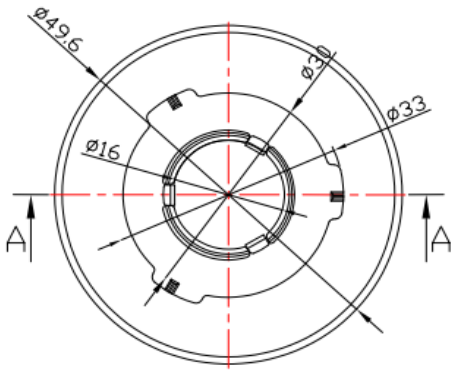


## Mögliche Halter / COB Kombinationen / Holder / COB combinations 1709-M

| COB Hersteller<br>COB Supplier | COB Typ<br>COB Type | Halter<br>Holder | B+W Adapter<br>B+W Adaptor |
|---|---|---|---|
| Nichia | NV..S007Z / NF..T012B | 452 Typ N1 | 430/48720 Adaptor N1 M30 |
| Nichia | NF..S024B / NT..S024B | 452 Typ N1 | 430/48720 Adaptor N1 M30 |
| Nichia | NJ..S024Z | 452 Typ N1 | 430/48720 Adaptor N1 M30 |
| Nichia | NV..L016Z / NV..L024Z | 438 Typ N1 | 430/48720 Adaptor N1 M30 |
| Nichia | NF..L036B / NF..L048B | 438 Typ N1 | 430/48720 Adaptor N1 M30 |
| Nichia | NF..L060B | 438 Typ N1 | 430/48720 Adaptor N1 M30 |
| Nichia | NJNWS012Z Tunable | 495 Typ N1 HV | 430/48720 Adaptor N1 M30 |
| Nichia | NJCWL024Z Tunable | 497 Typ N1 HV | 430/48720 Adaptor N1 M30 |

MechaTronix

**ModuLed Mega**
**ModuLed Giga**
**CoolBay Giga-B**
**CoolBay Tera-B**

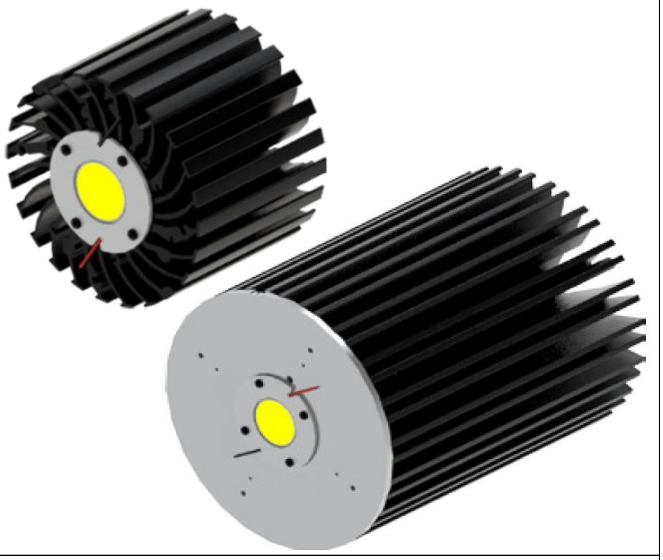

**MechaTronix Kühlkörper** High Bay Coolers
Mechatronix heat sink

**Hersteller Webseite** www.led-heatsink.com
Manufacturer website

**LED Halter B+W** 4xx / Typ M1 (HV)
LED Holder B+W 4xx / Typ M2

4xx / Typ M1 (HV)

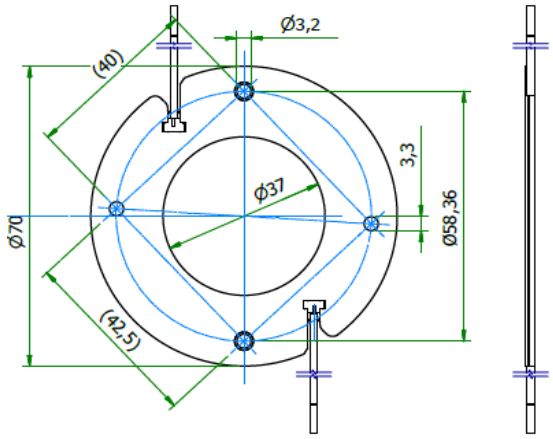


4xx / Typ M2

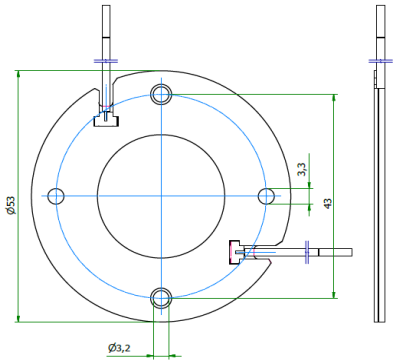


**Mögliche Halter / COB Kombinationen /** Holder / COB combinations — **MechaTronix High Bay Cooler**

| COB Hersteller<br>COB Supplier | COB Typ<br>COB Type | Halter<br>Holder | Kühlkörper<br>Heat sink |
|---|---|---|---|
| Nichia | NF..H306B | 488 Typ M1 HV | see MechaTronix website |

Zhaga

## Buch 3 kompatibler Halter
## Book 3 compatible holder

| | | |
|---|---|---|
| **Zhaga Webseite**<br>Zhaga website | www.zhagastandard.org | **Zertifikate / certificates** |
| **LED Halter B+W**<br>LED Holder B+W | 4xx / Typ Z1 | **Ausweis-Nr.** 40041342 **File** E47294 |

**Unsere Halter 4xx Typ Z1 entsprechen mit dem Aussendurchmesser und den Befestigungspunkten den Vorgaben von Zhaga Buch 3, aber durch die extrem flache Bauweise können sie nicht zertifziert werden.**

The shape and fixing points holders of our holders 4xx Type Z1 are compatible to Zhaga Book 3, but due to the thin design they cannot be certified.

4xx / Typ Z1

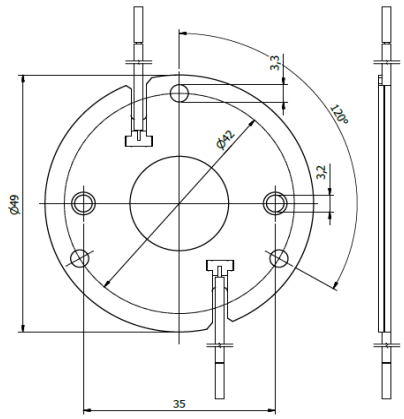


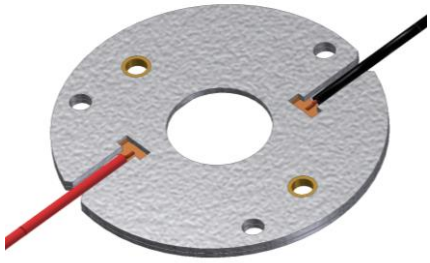

## verfügbare Halter / available Holder

| COB Hersteller<br>COB Supplier | COB Typ<br>COB Type | Halter<br>Holder |
|---|---|---|
| Nichia | NV..S007Z / NF..T012B | 452 Typ Z1 |
| Nichia | NF..S024B / NT..S024B | 452 Typ Z1 |
| Nichia | NJ..S024Z | 452 Typ Z1 |
| Nichia | NV..L016Z / NV..L024Z | 438 Typ Z1 |
| Nichia | NF..L036B / NF..L048B | 438 Typ Z1 |
| Nichia | NF..L060B | 438 Typ Z1 |
| Nichia | NV..J048Z / NF..J108B | 463 Typ Z1 |
| Nichia | NF..J130B | 463 Typ Z1 |
| Nichia | NJNWS012Z Tunable | 495 Typ Z1 HV |
| Nichia | NJCWL024Z Tunable | 497 Typ Z1 HV |
| Nichia | NVCWJ024Z Tunable | 498 Typ Z1 HV |

**Wir helfen Ihnen gerne weiter.**
**Sprechen Sie uns einfach an!**

**Please don´t hesitate to contact us**
**for any further questions.**

BENDER
+WIRTH

## Ihr Kontakt:
## Your contact:


Michael Kritzler
Head of Engineering
+49 (0) 2359 / 669 - 184
kritzler@bender-wirth.de

Bender + Wirth GmbH & Co.
D-58566 Kierspe, Germany
+49 (2359) / 669 - 0
sales@bender-wirth.de
www.bender-wirth.de