BENDER +WIRTH

LED HALTER SERIE 430 + 630

LED HOLDER SERIES 430 + 630

Katalog der Standardhalter für **Khatod** Optiken

Catalogue of standard holders for **Khatod** optics

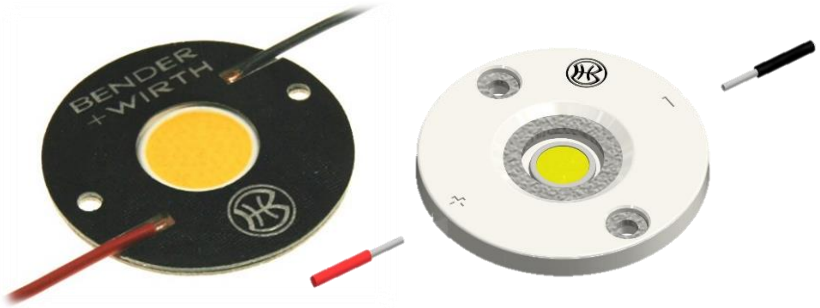

UNSER KONZEPT
FÜR **IHRE**
INDIVIDUELLE
LED MONTAGE

OUR CONCEPT
FOR **YOUR**
INDIVIDUAL
LED MOUNTING

KHATOD®
Optical Solutions for LED Lighting

INHALTSVERZEICHNIS
CONTENT

Hersteller / Supplier	Optik / Optics	Halter Typ / holder type	Seite / Page
	COB Halter Hybrid 630 / COB Holder Hybrid 630		
Lowprofile		*6xxz LowProfile*	4
Bayonet50	*Gaggione LLRx7M, Ledil "B"- Optics*	*6xxz Bayonet50*	9
	LED Halter 430 / LED Holder 430		
Basishalter / Standard holders		*4xx Typ xx*	14
Khatod	*Cosmo*	*4xx Typ K3 / Z1*	20
	Easy	*4xx Typ Z2 / Z3*	26
	Easy Assymetric	*4xx Typ Z2*	31
	PL 50 SIL	*4xx Typ K2*	35
	SiO 3 / SiO 3 Junior	*4xx Typ K1*	40
	SIR 50	*4xx Typ K3*	45
Zhaga	*Book 3*	*4xx Typ Z1*	48

Ist Ihre COB oder die gewünschte Bauform nicht aufgeführt?
Bitte sprechen Sie uns an.
If your COB or requested shape is not listed, please contact us.

Die dargestellten Halter / Reflektor Kombinationen zeigen lediglich die technische Machbarkeit. Technische Daten und Montagehinweise sind in unserem Technical Guide LED Halter Serie 430 und 630 aufgeführt.
Die Kabelaustritte an den Haltern sind abhängig vom verwendeten COB.
Optische Daten und Datenblätter gibt es auf Anfrage nach Verfügbarkeit beim Reflektorhersteller.
The illustrated holder / reflector combinations only show the technical feasibility.
Technical data and mounting instructions are listed in our Technical Guide LED holder series 430 and 630.
The cable exits of the holders are pending on the COB.
Optical data and datasheets are available upon request and availability by the reflector manufacturer.

Die Informationen in diesem Dokument sind ohne Gewähr und können ohne Vorankündigung geändert werden.
The information in this document is provided without liability and subject to change without notice.

COB HALTER HYBRID
COB HOLDER HYBRID

630

BENDER +WIRTH

Gehäusetyp: Housing:	**LowProfile**	**Größe / Size : 44/50 mm** **Höhe / Height : 3,4 mm**
Beispiele für passende Optiken examples of suitable optics	**LEDiL STELLA-T4, -VSM, -DWC2, -G2-T2, -G2-T3, -G2-T4** **KHATOD COSMO 70/90mm**	

633a/47590 (2 : 1) Version 1: 633x, 634x, 637x, 638x, 641x, 652x, 660x

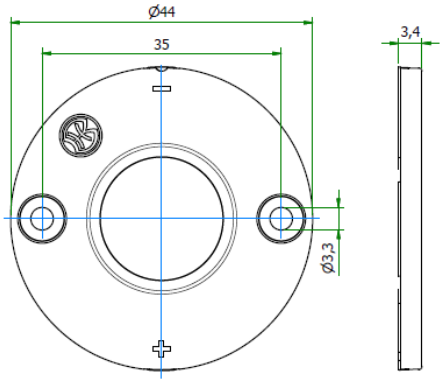

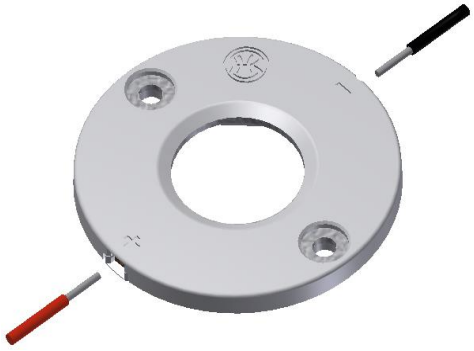

631a/47584 (2 : 1) Version 2: 631x, 632x, 639x, 663x

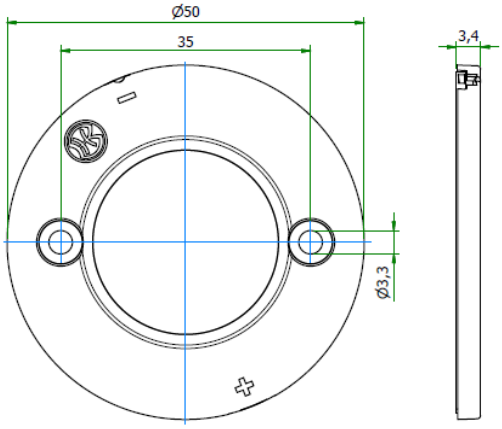

Bemessungsspannung rated voltage	**Standard 250V DC** **optional 450V DC**	**Zulässige COB Abmessungen** Permissible COB dimensions
Bemessungsstrom rated current	**5 A**	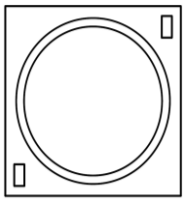 **siehe Einzeldatenblätter im Online Katalog** see data sheets at our web catalogue
Bemessungstemperatur rated operating temperature	**T 120**	
Befestigung fixing	**2 Schrauben M3** 2 screws M3	
max. Drehmonent max. torque	**0,5 Nm**	
Material des Halters material of the holder	**PBT / Mikanit** PBT / Mica	**Zertifikate / certificates**
Kontaktmaterial contactmaterial	**CuSn** CuSn	**Ausweis-Nr.** **File E4729**

Weitere technische Daten und Montagehinweise sind im Technical Guide COB Halterserie 630 enthalten.
Further technical details and mounting instructions are part of the Technical Guide COB holder series 630.

Teilumhüllter Halter für folgende COBs / unenclosed holder for the following COBs:			
Hersteller supplier	**COB Typ** COB Type	**Teile-Nr.** part no.	**Haltervariante** variant of holder
Bridgelux	V3 HD / V4 HD Gen 7,8	**47954**	COB Holder Hybrid 660a LowProfile
Bridgelux	V6 HD Gen 7,8	**47870**	COB Holder Hybrid 634c LowProfile
Bridgelux	V9 HD / V11 HD Gen 7,8	**47862**	COB Holder Hybrid 633d LowProfile
Bridgelux	V6 Gen 8,9 (just 2 pads!)	**47954**	COB Holder Hybrid 660a LowProfile
Bridgelux	V8 Gen 7,8,9 (4 pads)	**47954**	COB Holder Hybrid 660a LowProfile
Bridgelux	V10 Gen 7,8,9	**47866**	COB Holder Hybrid 634b LowProfile
Bridgelux	V13 Gen 7,8,9	**47861**	COB Holder Hybrid 633c LowProfile
Bridgelux	V18 Gen 7,8,9	**47884**	COB Holder Hybrid 639b LowProfile
Bridgelux	V22 Gen 7,8,9	**47856**	COB Holder Hybrid 631b LowProfile
Bridgelux	Vesta DTW 6/9mm Gen 1,2	**47894**	COB Holder Hybrid 652b LowProfile
Bridgelux	Vesta DTW 13/15mm Gen 1,2	**47860**	COB Holder Hybrid 632b LowProfile
Bridgelux	Vesta DTW 18mm Gen 1	**on request**	COB Holder Hybrid 639c LowProfile
Bridgelux	Vesta Tunable 9mm Gen 2	**on request**	Werkzeug fehlt / Tooling required
Bridgelux	Vesta Tunable 13mm Gen 2	**on request**	Werkzeug fehlt / Tooling required
Citizen	CLU 028 / 02J / 02Q	**47659**	COB Holder Hybrid 634a LowProfile
Citizen	CLU 038 / 03H / 03J / 03Q	**47590**	COB Holder Hybrid 633a LowProfile
Citizen	CLU 048 / 04H / 04J / 04Q	**47584**	COB Holder Hybrid 631a LowProfile
Citizen	CLU 7L3 / 7S3	**on request**	Werkzeug fehlt / Tooling required
Citizen	CLU 702 / 703 / 7A2 /7A3 / 7B2	**47659**	COB Holder Hybrid 634a LowProfile
Citizen	CLU 712 / 713	**47861**	COB Holder Hybrid 633c LowProfile
Citizen	CLU 723	**47861**	COB Holder Hybrid 633c LowProfile
Citizen	CLU 733	**47856**	COB Holder Hybrid 631b LowProfile
CREE	CHA 0304 / 0410 / 0612	**47659**	COB Holder Hybrid 634a LowProfile
CREE	CHA 0825	**47590**	COB Holder Hybrid 633a LowProfile
CREE	CMA 1303 / 1306	**47870**	COB Holder Hybrid 634c LowProfile
CREE	CMA 1516	**47462**	COB Holder Hybrid 641a LowProfile
CREE	CMA 1825 / 1840	**47471**	COB Holder Hybrid 637a LowProfile
CREE	CMA 2550	**47586**	COB Holder Hybrid 639a LowProfile
CREE	CMB 1304 / 1306	**47870**	COB Holder Hybrid 634c LowProfile
CREE	CMB 1507 / 1510 / 1516	**47462**	COB Holder Hybrid 641a LowProfile
CREE	CMB 1818 / 1825	**47471**	COB Holder Hybrid 637a LowProfile
CREE	CMB 1840	**47874**	COB Holder Hybrid 637b LowProfile
CREE	CMB 2550	**47586**	COB Holder Hybrid 639a LowProfile
CREE	CMT 1407 / 1412 / 1420	**47659**	COB Holder Hybrid 634a LowProfile
CREE	CMT 1922 / 1925 / 1930 / 1945	**47861**	COB Holder Hybrid 633c LowProfile
CREE	CMT 2850 / 2870 / 2890	**47856**	COB Holder Hybrid 631b LowProfile
CREE	CMU 1003 / 1006 / 1010 / 1013	**47659**	COB Holder Hybrid 634a LowProfile
CREE	CMU 1516 / 1519 / 1526 / 1532	**47590**	COB Holder Hybrid 633a LowProfile
CREE	CMU 2236 / 2239 / 2258 / 2287	**47856**	COB Holder Hybrid 631b LowProfile
CREE	CXB 1304 / 1310	**47870**	COB Holder Hybrid 634c LowProfile

CREE	CXB 1507 / 1512 / 1520	**47462**	COB Holder Hybrid 641a	LowProfile
CREE	CXB 1816 / 1820	**47471**	COB Holder Hybrid 637a	LowProfile
CREE	CXB 1830	**47874**	COB Holder Hybrid 637b	LowProfile
CREE	CXB 2530 / 2540	**47586**	COB Holder Hybrid 639a	LowProfile
Edison	2PHE 03 / 06 / 09 / 13	**47659**	COB Holder Hybrid 634a	LowProfile
Edison	2PHE 15 / 18 / 24 / 30	**47590**	COB Holder Hybrid 633a	LowProfile
Edison	2PHE 55 / 60 / 83	**47584**	COB Holder Hybrid 631a	LowProfile
Lextar	PB 06 / 09 / 13	**47659**	COB Holder Hybrid 634a	LowProfile
Lextar	PB 16 / 19 / 26	**47590**	COB Holder Hybrid 633a	LowProfile
Lextar	PB 38 / 54	**47584**	COB Holder Hybrid 631a	LowProfile
Lumileds	Luxeon 1202s / 1202HD	**47455**	COB Holder Hybrid 652a	LowProfile
Lumileds	Luxeon 1202 / 1203 / 1204HD	**47880**	COB Holder Hybrid 638b	LowProfile
Lumileds	Luxeon 1205HD	**47880**	COB Holder Hybrid 638b	LowProfile
Lumileds	Luxeon 1204 / 1205	**47581**	COB Holder Hybrid 632a	LowProfile
Lumileds	Luxeon 1208 / 1210	**47581**	COB Holder Hybrid 632a	LowProfile
Lumileds	Luxeon 1211	**47856**	COB Holder Hybrid 631b	LowProfile
Lumileds	Luxeon 1213 / 1216 / 1812 / 1816	**47856**	COB Holder Hybrid 631b	LowProfile
Lumileds	CS COB L02 / L04	**47659**	COB Holder Hybrid 634a	LowProfile
Lumileds	CS COB L06 / L08 / L10	**47590**	COB Holder Hybrid 633a	LowProfile
Lumileds	CS COB L11 / L13 / L16	**47584**	COB Holder Hybrid 631a	LowProfile
Lumileds	CS COB R12 / R18	**47584**	COB Holder Hybrid 631a	LowProfile
Lumileds	CX Plus HD S01H4, S0xH6	**47870**	COB Holder Hybrid 634c	LowProfile
Lumileds	CX Plus HD S04H9	**47866**	COB Holder Hybrid 634b	LowProfile
Lumileds	CX Plus S01Fx / S02Fx	**47870**	COB Holder Hybrid 634c	LowProfile
Lumileds	CX Plus M02Fx / M03Fx	**47462**	COB Holder Hybrid 641a	LowProfile
Lumileds	CX Plus L04Fx / L05Fx / L08Fx	**47471**	COB Holder Hybrid 637a	LowProfile
Luminus	CXM-3-xC	**47659**	COB Holder Hybrid 634a	LowProfile
Luminus	CHM-4-BH / CXM-4-xC	**47659**	COB Holder Hybrid 634a	LowProfile
Luminus	CHM-6-BH / CXM-6-xC	**47659**	COB Holder Hybrid 634a	LowProfile
Luminus	CIM/CLM/CXM-9-xC	**47659**	COB Holder Hybrid 634a	LowProfile
Luminus	CHM-9-BH	**47590**	COB Holder Hybrid 633a	LowProfile
Luminus	CXM-11-xC	**47590**	COB Holder Hybrid 633a	LowProfile
Luminus	CGM/CIM/CLM/CXM-14-xC	**47590**	COB Holder Hybrid 633a	LowProfile
Luminus	CXM-18 Gen6	**47584**	COB Holder Hybrid 631a	LowProfile
Luminus	CGM/CIM/CLM/CXM-22-xC	**47584**	COB Holder Hybrid 631a	LowProfile
Luminus	CDM-6 / CDM-9Gen1 DtW	**47894**	COB Holder Hybrid 652b	LowProfile
Luminus	CDM-9 Gen2 DtW	**47860**	COB Holder Hybrid 632b	LowProfile
Luminus	CDM-14/CDM-18 DtW	**47860**	COB Holder Hybrid 632b	LowProfile
Luxtech	COB-WD-10-1512	**47455**	COB Holder Hybrid 652a	LowProfile
Luxtech	COB-WD-17-2420	**47581**	COB Holder Hybrid 632a	LowProfile
Nichia	NV..S007Z / NF..T012B	**47455**	COB Holder Hybrid 652a	LowProfile
Nichia	NF..S024B / NT..S024B	**47455**	COB Holder Hybrid 652a	LowProfile
Nichia	NJ..S024Z	**47455**	COB Holder Hybrid 652a	LowProfile

Nichia	NV..L016Z / NV..L024Z	**47465**	COB Holder Hybrid 638a	LowProfile
Nichia	NF..L036B / NF..L048B	**47465**	COB Holder Hybrid 638a	LowProfile
Nichia	NF..L060B	**47465**	COB Holder Hybrid 638a	LowProfile
Nichia	NV..J048Z / NF..J108B	**47953**	COB Holder Hybrid 663a	LowProfile
Nichia	NF..J130B	**47953**	COB Holder Hybrid 663a	LowProfile
Philips	Fortimo SLM12xx .. 1215 G7	**47455**	COB Holder Hybrid 652a	LowProfile
Philips	Fortimo SLM12xx .. 1619 G7	**47880**	COB Holder Hybrid 638b	LowProfile
Philips	Fortimo SLM12xx .. 2024 G7	**47581**	COB Holder Hybrid 632a	LowProfile
Philips	Fortimo SLM12xx .. 2828 G7	**47856**	COB Holder Hybrid 631b	LowProfile
Philips	Fortimo SLM12xx .. 1313 G7N	**47659**	COB Holder Hybrid 634a	LowProfile
Philips	Fortimo SLM12xx .. 1919 G7N	**47590**	COB Holder Hybrid 633a	LowProfile
Philips	Fortimo SLM12xx .. 2828 G7N	**47856**	COB Holder Hybrid 631b	LowProfile
Philips	Fortimo SLM13xx .. 2024 G8 UHE	**47581**	COB Holder Hybrid 632a	LowProfile
Philips	Fortimo SLM13xx .. 2828 G8 UHE	**47856**	COB Holder Hybrid 631b	LowProfile
Prolight Opto	PASB	**47659**	COB Holder Hybrid 634a	LowProfile
Prolight Opto	PASQ/PAPQ DimToWarm	**47659**	COB Holder Hybrid 634a	LowProfile
Prolight Opto	PDSQ DimToWarm	**47894**	COB Holder Hybrid 652b	LowProfile
Prolight Opto	PDSR DimToWarm	**47860**	COB Holder Hybrid 632b	LowProfile
Samsung	LC 010C	**47659**	COB Holder Hybrid 634a	LowProfile
Samsung	LC 020C / 030C / 040C	**47861**	COB Holder Hybrid 633c	LowProfile
Samsung	LC 003D / 006D	**47659**	COB Holder Hybrid 634a	LowProfile
Samsung	LC 009D / 013D	**47659**	COB Holder Hybrid 634a	LowProfile
Samsung	LC 016D / 019D	**47861**	COB Holder Hybrid 633c	LowProfile
Samsung	LC 026D / 033D	**47861**	COB Holder Hybrid 633c	LowProfile
Samsung	LC 040D / 060D / 080D	**47856**	COB Holder Hybrid 631b	LowProfile
Seoul	SAW* 0661	**47866**	COB Holder Hybrid 634b	LowProfile
Seoul	SAW* 1062 / 1063	**47866**	COB Holder Hybrid 634b	LowProfile
Seoul	SAW* 1564 / 1565 / 1566	**47861**	COB Holder Hybrid 633c	LowProfile
Seoul	SAW* 22AA / 2296	**47584**	COB Holder Hybrid 631a	LowProfile
Seoul	SAW* 2298 / 226A	**47584**	COB Holder Hybrid 631a	LowProfile
Tridonic	SLE ADV8 LES 04 / 06	**47659**	COB Holder Hybrid 634a	LowProfile
Tridonic	SLE ADV8 LES 09	**47659**	COB Holder Hybrid 634a	LowProfile
Tridonic	SLE ADV8 LES 13	**47861**	COB Holder Hybrid 633c	LowProfile
Tridonic	SLE ADV8 LES 15	**47861**	COB Holder Hybrid 633c	LowProfile
Tridonic	SLE ADV8 LES 17	**47856**	COB Holder Hybrid 631b	LowProfile
Tridonic	SLE ADV8 LES 21	**47856**	COB Holder Hybrid 631b	LowProfile
Tridonic	SLE SNC8 LES 06	**47659**	COB Holder Hybrid 634a	LowProfile
Tridonic	SLE SNC8 LES 09	**47659**	COB Holder Hybrid 634a	LowProfile
Tridonic	SLE SNC8 LES 15	**47861**	COB Holder Hybrid 633c	LowProfile
VS Lighting	DMS 102 ***W	**47659**	COB Holder Hybrid 634a	LowProfile
VS Lighting	DMS 124 ***W	**47659**	COB Holder Hybrid 634a	LowProfile
VS Lighting	DMS 125 / 126 / 128 ***W	**47590**	COB Holder Hybrid 633a	LowProfile
VS Lighting	DMS 120 ***W	**47584**	COB Holder Hybrid 631a	LowProfile

VS Lighting	DMS 12C / 18B ***W	**47584**	COB Holder Hybrid 631a	LowProfile
VS Lighting	DMS 1208J	**47590**	COB Holder Hybrid 633a	LowProfile
VS Lighting	DMS 1212J / 1812J	**47584**	COB Holder Hybrid 631a	LowProfile
VS Lighting	VCA 042	**47866**	COB Holder Hybrid 634b	LowProfile
VS Lighting	VCA2 122 / 123 / 124	**47866**	COB Holder Hybrid 634b	LowProfile
VS Lighting	VCA2 126 / 128	**47861**	COB Holder Hybrid 633c	LowProfile
VS Lighting	VCA2 1211 / 1213	**47856**	COB Holder Hybrid 631b	LowProfile
VS Lighting	WU-M-618 DimToWarm	**47659**	COB Holder Hybrid 634a	LowProfile
Xicato	XOB 04	**47866**	COB Holder Hybrid 634b	LowProfile
Xicato	XOB 06 (B)	**47866**	COB Holder Hybrid 634b	LowProfile
Xicato	XOB 09	**47659**	COB Holder Hybrid 634a	LowProfile
Xicato	XOB 14	**47590**	COB Holder Hybrid 633a	LowProfile
Xicato	XOB 23	**47584**	COB Holder Hybrid 631a	LowProfile

COB HALTER HYBRID
COB HOLDER HYBRID

630

BENDER +WIRTH

Gehäusetyp: Housing:	**Bayonet50**	**Größe / Size : 50 mm** **Höhe / Height : 4,9 mm**

Beispiele für passende Optiken examples of suitable optics	**LEDiL ANGELA-B, ANGELINA-B, ANGELETTE-B, ZORYA-B, ADELIA-B 50/70/110** **GAGGIONE LLR07M, LLR27M, HADAR70H41*** **HERCULUX KIRIN HOLDER D50**

633a/47420 (2 : 1)

Version 1: 633x, 634x, 637x, 638x, 641x, 652x, 660x

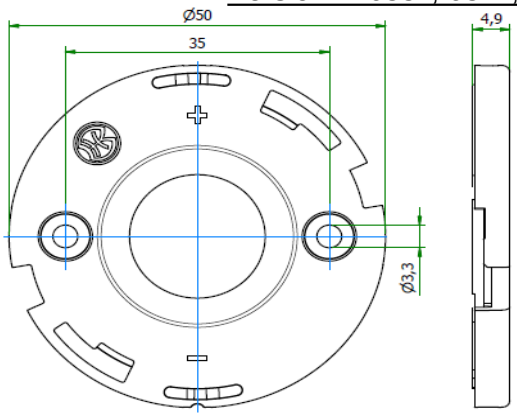

631a/47512 (2 : 1)

Version 2: 631x, 632x, 639x, 663x

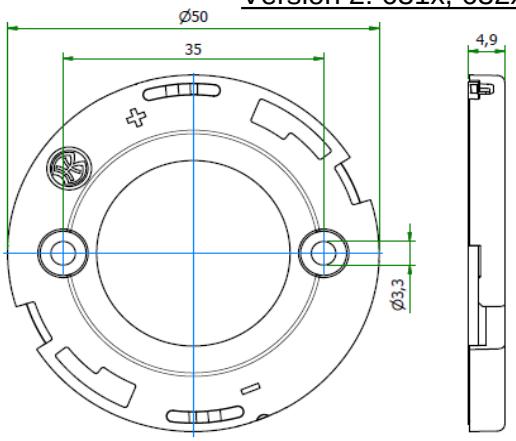

Bemessungsspannung rated voltage	**Standard 250V DC** **optional 450V DC**	
Bemessungsstrom rated current	**5 A**	
Bemessungstemperatur rated operating temperature	**T 120**	
Befestigung fixing	**2 Schrauben M3** 2 screws M3	
max. Drehmonent max. torque	**0,5 Nm**	
Material des Halters material of the holder	**PBT / Mikanit** PBT / Mica	
Kontaktmaterial contactmaterial	**CuSn** CuSn	

Zulässige COB Abmessungen
Permissible COB dimensions

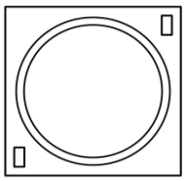

siehe Einzeldatenblätter im Online Katalog

see data sheets at our web catalogue

Zertifikate / certificates

Ausweis-Nr.

File E4729

Weitere technische Daten und Montagehinweise sind im Technical Guide COB Halterserie 630 enthalten.
Further technical details and mounting instructions are part of the Technical Guide COB holder series 630.

Teilumhüllter Halter für folgende COBs / unenclosed holder for the following COBs:			
Hersteller supplier	**COB Typ** COB Type	**Teile-Nr.** part no.	**Haltervariante** variant of holder
Bridgelux	V3 HD / V4 HD Gen 7,8	**47955**	COB Holder Hybrid 660a Bayonet50
Bridgelux	V6 HD Gen 7,8	**47414**	COB Holder Hybrid 634c Bayonet50
Bridgelux	V9 HD / V11 HD Gen 7,8	**47423**	COB Holder Hybrid 633d Bayonet50
Bridgelux	V6 Gen 8,9 (just 2 pads!)	**47955**	COB Holder Hybrid 660a Bayonet50
Bridgelux	V8 Gen 7,8,9 (4 pads)	**47955**	COB Holder Hybrid 660a Bayonet50
Bridgelux	V10 Gen 7,8,9	**47413**	COB Holder Hybrid 634b Bayonet50
Bridgelux	V13 Gen 7,8,9	**47422**	COB Holder Hybrid 633c Bayonet50
Bridgelux	V18 Gen 7,8,9	**47539**	COB Holder Hybrid 639b Bayonet50
Bridgelux	V22 Gen 7,8,9	**47528**	COB Holder Hybrid 631b Bayonet50
Bridgelux	Vesta DTW 6/9mm Gen 1,2	**47890**	COB Holder Hybrid 652b Bayonet50
Bridgelux	Vesta DTW 13/15mm Gen 1,2	**47857**	COB Holder Hybrid 632b Bayonet50
Bridgelux	Vesta DTW 18mm Gen 1	**on request**	COB Holder Hybrid 639c Bayonet50
Bridgelux	Vesta Tunable 9mm Gen 2	**on request**	Werkzeug fehlt / Tooling required
Bridgelux	Vesta Tunable 13mm Gen 2	**on request**	Werkzeug fehlt / Tooling required
Citizen	CLU 028 / 02J / 02Q	**47412**	COB Holder Hybrid 634a Bayonet50
Citizen	CLU 038 / 03H / 03J / 03Q	**47420**	COB Holder Hybrid 633a Bayonet50
Citizen	CLU 048 / 04H / 04J / 04Q	**47512**	COB Holder Hybrid 631a Bayonet50
Citizen	CLU 7L3 / 7S3	**on request**	Werkzeug fehlt / Tooling required
Citizen	CLU 702 / 703 / 7A2 /7A3 / 7B2	**47412**	COB Holder Hybrid 634a Bayonet50
Citizen	CLU 712 / 713	**47422**	COB Holder Hybrid 633c Bayonet50
Citizen	CLU 723	**47422**	COB Holder Hybrid 633c Bayonet50
Citizen	CLU 733	**47528**	COB Holder Hybrid 631b Bayonet50
CREE	CHA 0304 / 0410 / 0612	**47412**	COB Holder Hybrid 634a Bayonet50
CREE	CHA 0825	**47420**	COB Holder Hybrid 633a Bayonet50
CREE	CMA 1303 / 1306	**47414**	COB Holder Hybrid 634c Bayonet50
CREE	CMA 1516	**47458**	COB Holder Hybrid 641a Bayonet50
CREE	CMA 1825 / 1840	**47468**	COB Holder Hybrid 637a Bayonet50
CREE	CMA 2550	**47538**	COB Holder Hybrid 639a Bayonet50
CREE	CMB 1304 / 1306	**47414**	COB Holder Hybrid 634c Bayonet50
CREE	CMB 1507 / 1510 / 1516	**47458**	COB Holder Hybrid 641a Bayonet50
CREE	CMB 1818 / 1825	**47468**	COB Holder Hybrid 637a Bayonet50
CREE	CMB 1840	**47534**	COB Holder Hybrid 637b Bayonet50
CREE	CMB 2550	**47538**	COB Holder Hybrid 639a Bayonet50
CREE	CMT 1407 / 1412 / 1420	**47412**	COB Holder Hybrid 634a Bayonet50
CREE	CMT 1922 / 1925 / 1930 / 1945	**47422**	COB Holder Hybrid 633c Bayonet50
CREE	CMT 2850 / 2870 / 2890	**47528**	COB Holder Hybrid 631b Bayonet50
CREE	CMU 1003 / 1006 / 1010 / 1013	**47412**	COB Holder Hybrid 634a Bayonet50
CREE	CMU 1516 / 1519 / 1526 / 1532	**47420**	COB Holder Hybrid 633a Bayonet50
CREE	CMU 2236 / 2239 / 2258 / 2287	**47528**	COB Holder Hybrid 631b Bayonet50
CREE	CXB 1304 / 1310	**47414**	COB Holder Hybrid 634c Bayonet50

CREE	CXB 1507 / 1512 / 1520	**47458**	COB Holder Hybrid 641a	Bayonet50
CREE	CXB 1816 / 1820	**47468**	COB Holder Hybrid 637a	Bayonet50
CREE	CXB 1830	**47534**	COB Holder Hybrid 637b	Bayonet50
CREE	CXB 2530 / 2540	**47538**	COB Holder Hybrid 639a	Bayonet50
Edison	2PHE 03 / 06 / 09 / 13	**47412**	COB Holder Hybrid 634a	Bayonet50
Edison	2PHE 15 / 18 / 24 / 30	**47420**	COB Holder Hybrid 633a	Bayonet50
Edison	2PHE 55 / 60 / 83	**47512**	COB Holder Hybrid 631a	Bayonet50
Lextar	PB 06 / 09 / 13	**47412**	COB Holder Hybrid 634a	Bayonet50
Lextar	PB 16 / 19 / 26	**47420**	COB Holder Hybrid 633a	Bayonet50
Lextar	PB 38 / 54	**47512**	COB Holder Hybrid 631a	Bayonet50
Lumileds	Luxeon 1202s / 1202HD	**47453**	COB Holder Hybrid 652a	Bayonet50
Lumileds	Luxeon 1202 / 1203 / 1204HD	**47876**	COB Holder Hybrid 638b	Bayonet50
Lumileds	Luxeon 1205HD	**47876**	COB Holder Hybrid 638b	Bayonet50
Lumileds	Luxeon 1204 / 1205	**47449**	COB Holder Hybrid 632a	Bayonet50
Lumileds	Luxeon 1208 / 1210	**47449**	COB Holder Hybrid 632a	Bayonet50
Lumileds	Luxeon 1211	**47528**	COB Holder Hybrid 631b	Bayonet50
Lumileds	Luxeon 1213 / 1216 / 1812 / 1816	**47528**	COB Holder Hybrid 631b	Bayonet50
Lumileds	CS COB L02 / L04	**47412**	COB Holder Hybrid 634a	Bayonet50
Lumileds	CS COB L06 / L08 / L10	**47420**	COB Holder Hybrid 633a	Bayonet50
Lumileds	CS COB L11 / L13 / L16	**47512**	COB Holder Hybrid 631a	Bayonet50
Lumileds	CS COB R12 / R18	**47512**	COB Holder Hybrid 631a	Bayonet50
Lumileds	CX Plus HD S01H4, S0xH6	**47414**	COB Holder Hybrid 634c	Bayonet50
Lumileds	CX Plus HD S04H9	**47413**	COB Holder Hybrid 634b	Bayonet50
Lumileds	CX Plus S01Fx / S02Fx	**47414**	COB Holder Hybrid 634c	Bayonet50
Lumileds	CX Plus M02Fx / M03Fx	**47458**	COB Holder Hybrid 641a	Bayonet50
Lumileds	CX Plus L04Fx / L05Fx / L08Fx	**47468**	COB Holder Hybrid 637a	Bayonet50
Luminus	CXM-3-xC	**47412**	COB Holder Hybrid 634a	Bayonet50
Luminus	CHM-4-BH / CXM-4-xC	**47412**	COB Holder Hybrid 634a	Bayonet50
Luminus	CHM-6-BH / CXM-6-xC	**47412**	COB Holder Hybrid 634a	Bayonet50
Luminus	CIM/CLM/CXM-9-xC	**47412**	COB Holder Hybrid 634a	Bayonet50
Luminus	CHM-9-BH	**47420**	COB Holder Hybrid 633a	Bayonet50
Luminus	CXM-11-xC	**47420**	COB Holder Hybrid 633a	Bayonet50
Luminus	CGM/CIM/CLM/CXM-14-xC	**47420**	COB Holder Hybrid 633a	Bayonet50
Luminus	CXM-18 Gen6	**47512**	COB Holder Hybrid 631a	Bayonet50
Luminus	CGM/CIM/CLM/CXM-22-xC	**47512**	COB Holder Hybrid 631a	Bayonet50
Luminus	CDM-6 / CDM-9Gen1 DtW	**47890**	COB Holder Hybrid 652b	Bayonet50
Luminus	CDM-9 Gen2 DtW	**47857**	COB Holder Hybrid 632b	Bayonet50
Luminus	CDM-14/CDM-18 DtW	**47857**	COB Holder Hybrid 632b	Bayonet50
Luxtech	COB-WD-10-1512	**47453**	COB Holder Hybrid 652a	Bayonet50
Luxtech	COB-WD-17-2420	**47449**	COB Holder Hybrid 632a	Bayonet50
Nichia	NV..S007Z / NF..T012B	**47453**	COB Holder Hybrid 652a	Bayonet50
Nichia	NF..S024B / NT..S024B	**47453**	COB Holder Hybrid 652a	Bayonet50
Nichia	NJ..S024Z	**47453**	COB Holder Hybrid 652a	Bayonet50

Nichia	NV..L016Z / NV..L024Z	**47463**	COB Holder Hybrid 638a	Bayonet50
Nichia	NF..L036B / NF..L048B	**47463**	COB Holder Hybrid 638a	Bayonet50
Nichia	NF..L060B	**47463**	COB Holder Hybrid 638a	Bayonet50
Nichia	NV..J048Z / NF..J108B	**47932**	COB Holder Hybrid 663a	Bayonet50
Nichia	NF..J130B	**47932**	COB Holder Hybrid 663a	Bayonet50
Philips	Fortimo SLM12xx .. 1215 G7	**47453**	COB Holder Hybrid 652a	Bayonet50
Philips	Fortimo SLM12xx .. 1619 G7	**47876**	COB Holder Hybrid 638b	Bayonet50
Philips	Fortimo SLM12xx .. 2024 G7	**47449**	COB Holder Hybrid 632a	Bayonet50
Philips	Fortimo SLM12xx .. 2828 G7	**47528**	COB Holder Hybrid 631b	Bayonet50
Philips	Fortimo SLM12xx .. 1313 G7N	**47412**	COB Holder Hybrid 634a	Bayonet50
Philips	Fortimo SLM12xx .. 1919 G7N	**47420**	COB Holder Hybrid 633a	Bayonet50
Philips	Fortimo SLM12xx .. 2828 G7N	**47528**	COB Holder Hybrid 631b	Bayonet50
Philips	Fortimo SLM13xx .. 2024 G8 UHE	**47449**	COB Holder Hybrid 632a	Bayonet50
Philips	Fortimo SLM13xx .. 2828 G8 UHE	**47528**	COB Holder Hybrid 631b	Bayonet50
Prolight Opto	PASB	**47412**	COB Holder Hybrid 634a	Bayonet50
Prolight Opto	PASQ/PAPQ DimToWarm	**47412**	COB Holder Hybrid 634a	Bayonet50
Prolight Opto	PDSQ DimToWarm	**47890**	COB Holder Hybrid 652b	Bayonet50
Prolight Opto	PDSR DimToWarm	**47857**	COB Holder Hybrid 632b	Bayonet50
Samsung	LC 010C	**47412**	COB Holder Hybrid 634a	Bayonet50
Samsung	LC 020C / 030C / 040C	**47422**	COB Holder Hybrid 633c	Bayonet50
Samsung	LC 003D / 006D	**47412**	COB Holder Hybrid 634a	Bayonet50
Samsung	LC 009D / 013D	**47412**	COB Holder Hybrid 634a	Bayonet50
Samsung	LC 016D / 019D	**47422**	COB Holder Hybrid 633c	Bayonet50
Samsung	LC 026D / 033D	**47422**	COB Holder Hybrid 633c	Bayonet50
Samsung	LC 040D / 060D / 080D	**47528**	COB Holder Hybrid 631b	Bayonet50
Seoul	SAW* 0661	**47413**	COB Holder Hybrid 634b	Bayonet50
Seoul	SAW* 1062 / 1063	**47413**	COB Holder Hybrid 634b	Bayonet50
Seoul	SAW* 1564 / 1565 / 1566	**47422**	COB Holder Hybrid 633c	Bayonet50
Seoul	SAW* 22AA / 2296	**47512**	COB Holder Hybrid 631a	Bayonet50
Seoul	SAW* 2298 / 226A	**47512**	COB Holder Hybrid 631a	Bayonet50
Tridonic	SLE ADV8 LES 04 / 06	**47412**	COB Holder Hybrid 634a	Bayonet50
Tridonic	SLE ADV8 LES 09	**47412**	COB Holder Hybrid 634a	Bayonet50
Tridonic	SLE ADV8 LES 13	**47422**	COB Holder Hybrid 633c	Bayonet50
Tridonic	SLE ADV8 LES 15	**47422**	COB Holder Hybrid 633c	Bayonet50
Tridonic	SLE ADV8 LES 17	**47528**	COB Holder Hybrid 631b	Bayonet50
Tridonic	SLE ADV8 LES 21	**47528**	COB Holder Hybrid 631b	Bayonet50
Tridonic	SLE SNC8 LES 06	**47412**	COB Holder Hybrid 634a	Bayonet50
Tridonic	SLE SNC8 LES 09	**47412**	COB Holder Hybrid 634a	Bayonet50
Tridonic	SLE SNC8 LES 15	**47422**	COB Holder Hybrid 633c	Bayonet50
VS Lighting	DMS 102 ***W	**47412**	COB Holder Hybrid 634a	Bayonet50
VS Lighting	DMS 124 ***W	**47412**	COB Holder Hybrid 634a	Bayonet50
VS Lighting	DMS 125 / 126 / 128 ***W	**47420**	COB Holder Hybrid 633a	Bayonet50
VS Lighting	DMS 120 ***W	**47512**	COB Holder Hybrid 631a	Bayonet50

VS Lighting	DMS 12C / 18B ***W	**47512**	COB Holder Hybrid 631a	Bayonet50
VS Lighting	DMS 1208J	**47420**	COB Holder Hybrid 633a	Bayonet50
VS Lighting	DMS 1212J / 1812J	**47512**	COB Holder Hybrid 631a	Bayonet50
VS Lighting	VCA 042	**47413**	COB Holder Hybrid 634b	Bayonet50
VS Lighting	VCA2 122 / 123 / 124	**47413**	COB Holder Hybrid 634b	Bayonet50
VS Lighting	VCA2 126 / 128	**47422**	COB Holder Hybrid 633c	Bayonet50
VS Lighting	VCA2 1211 / 1213	**47528**	COB Holder Hybrid 631b	Bayonet50
VS Lighting	WU-M-618 DimToWarm	**47412**	COB Holder Hybrid 634a	Bayonet50
Xicato	XOB 04	**47413**	COB Holder Hybrid 634b	Bayonet50
Xicato	XOB 06 (B)	**47413**	COB Holder Hybrid 634b	Bayonet50
Xicato	XOB 09	**47412**	COB Holder Hybrid 634a	Bayonet50
Xicato	XOB 14	**47420**	COB Holder Hybrid 633a	Bayonet50
Xicato	XOB 23	**47512**	COB Holder Hybrid 631a	Bayonet50

Basishalter für Anwendungen, in denen keine besondere Anbindung zur Optik erforderlich ist.
Basic holders for applications without specific connection requirements to the optical system

Weitere Details unter More details at	www.bender-wirth.de	**Zertifikate /** certificates
LED Halter B+W LED Holder B+W	4xx / Typ xx	**Ausweis-Nr.** **40041342** **File** **E472943**

4xx / Typ xx

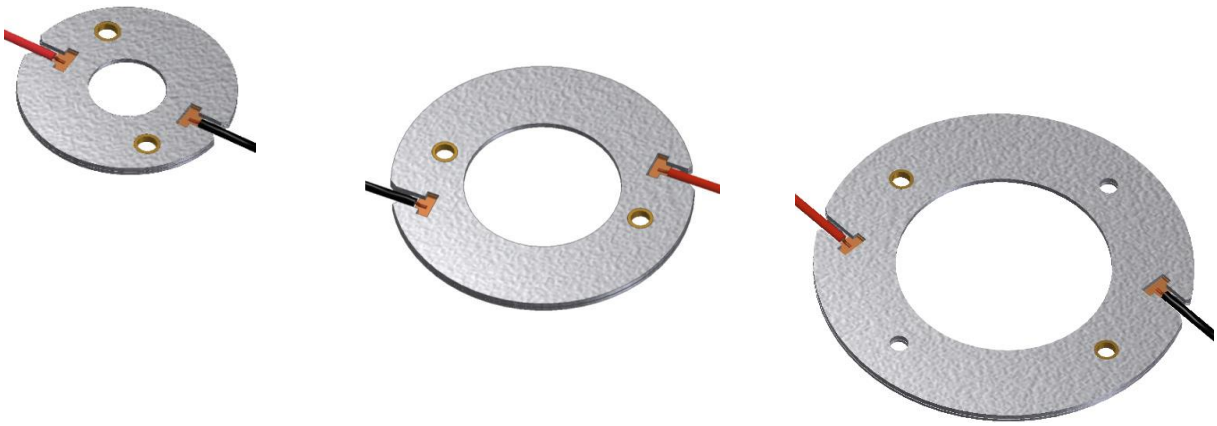

Mögliche Halter / COB Kombinationen / Holder / COB combinations

COB Hersteller COB Supplier	COB Typ COB Type	Halter Holder	Abmessungen Dimensions
Bridgelux	V3 HD / V4 HD Gen 7,8	460 Typ 1	29 x 27 / 21
Bridgelux	V6 HD Gen 7,8	464 Typ 1	Ø 35 / 25
Bridgelux	V9 HD / V11 HD Gen 7,8	496 Typ Z1	Ø 49 / 35
Bridgelux	V6 Gen 8,9 (just 2 pads!)	460 Typ 1	29 x 27 / 21
Bridgelux	V8 Gen 7,8,9 (4 pads)	460 Typ 1	29 x 27 / 21
Bridgelux	V10 Gen 7,8,9	486 Typ Z4	Ø 35 / 25
Bridgelux	V13 Gen 7,8,9	477 Typ 1	Ø 40 / 30
Bridgelux	V15 Gen 7,8,9	456 Typ L1-4	Ø 36,2 / 26,9
Bridgelux	V18 Gen 7,8,9	462 Typ 1	Ø 50 / 35
Bridgelux	V22 Gen 7,8,9	431 Typ 2	Ø 50 / 35
Bridgelux	Vesta DTW 6/9mm Gen 1,2	490 Typ L8	Ø 44 / 35
Bridgelux	Vesta DTW 13/15mm Gen 1,2	491 Typ L8	Ø 44 / 35
Bridgelux	Vesta DTW 18mm Gen 1	505 Typ Z1	Ø 49 / 35
Bridgelux	Vesta DTW 29mm Gen 1	506 Typ 1	Ø 55 / 43
Bridgelux	Vesta Tunable 6mm Gen 2	504 Typ L8	Ø 44 / 35
Bridgelux	Vesta Tunable 9mm Gen 2	489 Typ L8	Ø 44 / 35

Mögliche Halter / COB Kombinationen / Holder / COB combinations

COB Hersteller COB Supplier	COB Typ COB Type	Halter Holder	Abmessungen Dimensions
Bridgelux	Vesta Tunable 13mm Gen 2	492 Typ L8	Ø 44 / 35
Bridgelux	Vesta Tunable 15mm Gen 2	482 Typ L8	Ø 44 / 35
Bridgelux	Vesta Tunable 18mm Gen 2	483 Typ Z1	Ø 49 / 35
Bridgelux	Vesta Tunable 22mm Gen 2	494 Typ Z1	Ø 49 / 35
Bridgelux	Vesta Tunable 29mm Gen 2	503 Typ 1	Ø 55 / 43
Citizen	CLU 028 / 02J / 02Q	434 Typ 2	Ø 35 / 25
Citizen	CLU 038 / 03H / 03J / 03Q	433 Typ 2	Ø 40 / 30
Citizen	CLU 048 / 04H / 04J / 04Q	431 Typ 2	Ø 50 / 35
Citizen	CLU 058 / 05Q ..1825	458 Typ 1	Ø 65 / 50
Citizen	CLU 058 / 05H / 05Q ..3618	458 Typ 1 HV	Ø 65 / 50
Citizen	CLU 550 / 551	476 Typ 1 HV	Ø 65 / 50
Citizen	CLU 7L3 / 7S3	467 Typ 1	Ø 27 / 17
Citizen	CLU 7R3	485 Typ 1	Ø 27 / 17
Citizen	CLU 702 / 703 / 7A2 /7A3 / 7B2	434 Typ 2	Ø 35 / 25
Citizen	CLU 712 / 713	477 Typ 2	Ø 40 / 30
Citizen	CLU 723	477 Typ 2	Ø 40 / 30
Citizen	CLU 733	471 Typ 1	Ø 50 / 35
Citizen	LCN-C01B2 / C02B2 Tunable	481 Typ Z1	Ø 49 / 35
Citizen	LCN-C04B2 / C05B2 Tunable	481 Typ Z1	Ø 49 / 35
Citizen	LCN-C07A2 Tunable	507 Typ 1	
Citizen	LCN-C08A2 /C09A2 Tunable	508 Typ 1	
CREE	CHA 0304 / 0410 / 0612	434 Typ 2	Ø 35 / 25
CREE	CHA 0825	433 Typ 2	Ø 40 / 30
CREE	CMA 1303 / 1306	448 Typ 1	Ø 30 / 20
CREE	CMA 1516	441 Typ 2	Ø 35 / 25
CREE	CMA 1825 / 1840	437 Typ 2	Ø 40 / 30
CREE	CMA 2550	439 Typ 1	Ø 50 / 35
CREE	CMA 3090	447 Typ 1	Ø 50 / 35
CREE	CMB 1304 / 1306	448 Typ 1	Ø 30 / 20
CREE	CMB 1507 / 1510 / 1516	441 Typ 2	Ø 35 / 25
CREE	CMB 1818 / 1825	437 Typ 2	Ø 40 / 30
CREE	CMB 1840	457 Typ 1	Ø 40 / 30
CREE	CMB 2550	439 Typ 1	Ø 50 / 35
CREE	CMB 3090	447 Typ 1	Ø 50 / 35
CREE	CMT 1407 / 1412 / 1420	434 Typ 2	Ø 35 / 25

Mögliche Halter / COB Kombinationen / Holder / COB combinations

COB Hersteller COB Supplier	COB Typ COB Type	Halter Holder	Abmessungen Dimensions
CREE	CMT 1922 / 1925 / 1930 / 1945	477 Typ 2	Ø 40 / 30
CREE	CMT 2850 / 2870 / 2890	471 Typ 1	Ø 50 / 35
CREE	CMU 1003 / 1006 / 1010 / 1013	434 Typ 2	Ø 35 / 25
CREE	CMU 1516 / 1519 / 1526 / 1532	433 Typ 2	Ø 40 / 30
CREE	CMU 2236 / 2239 / 2258 / 2287	471 Typ 1	Ø 50 / 35
CREE	CXB 1304 / 1310	448 Typ 1	Ø 30 / 20
CREE	CXB 1507 / 1512 / 1520	441 Typ 2	Ø 35 / 25
CREE	CXB 1816 / 1820	437 Typ 2	Ø 40 / 30
CREE	CXB 1830	457 Typ 1	Ø 40 / 30
CREE	CXB 2530 / 2540	439 Typ 1	Ø 50 / 35
CREE	CXB 3050 / 3070	447 Typ 1	Ø 50 / 35
CREE	CXB 3590	449 Typ 1	Ø 60 / 45
Edison	2PHE 03 / 06 / 09 / 13	434 Typ 2	Ø 35 / 25
Edison	2PHE 15 / 18 / 24 / 30	433 Typ 2	Ø 40 / 30
Edison	2PHE 55 / 60 / 83	431 Typ 2	Ø 50 / 35
Lextar	PB 06 / 09 / 13	434 Typ 2	Ø 35 / 25
Lextar	PB 16 / 19 / 26	433 Typ 2	Ø 40 / 30
Lextar	PB 38 / 54	431 Typ 2	Ø 50 / 35
Lumileds	Luxeon 1202s / 1202HD	452 Typ 1	Ø 30 / 20
Lumileds	Luxeon 1202 / 1203 / 1204HD	480 Typ 1	33 x 27 / 28
Lumileds	Luxeon 1205HD	480 Typ 1	33 x 27 / 28
Lumileds	Luxeon 1204 / 1205	432 Typ 2	Ø 50 / 35
Lumileds	Luxeon 1208 / 1210	432 Typ 2	Ø 50 / 35
Lumileds	Luxeon 1211	431 Typ 2	Ø 50 / 35
Lumileds	Luxeon 1213 / 1216 / 1812 / 1816	431 Typ 2	Ø 50 / 35
Lumileds	Luxeon 1321 / 1825	458 Typ 1	Ø 65 / 50
Lumileds	CS COB L02 / L04	434 Typ 2	Ø 35 / 25
Lumileds	CS COB L06 / L08 / L10	433 Typ 2	Ø 40 / 30
Lumileds	CS COB L11 / L13 / L16	431 Typ 2	Ø 50 / 35
Lumileds	CS COB R12 / R18	431 Typ 2	Ø 50 / 35
Lumileds	CX Plus HD S01H4, S0xH6	448 Typ 1	Ø 30 / 20
Lumileds	CX Plus HD S04H9	4xx Typ 1	Ø 30 / 20
Lumileds	CX Plus S01Fx / S02Fx	448 Typ 1	Ø 30 / 20
Lumileds	CX Plus M02Fx / M03Fx	441 Typ 2	Ø 35 / 25

Mögliche Halter / COB Kombinationen / Holder / COB combinations

COB Hersteller COB Supplier	COB Typ COB Type	Halter Holder	Abmessungen Dimensions
Lumileds	CX Plus L04Fx / L05Fx / L08Fx	437 Typ 2	Ø 40 / 30
Luminus	CXM-3-xC	434 Typ 2	Ø 35 / 25
Luminus	CHM-4-BH / CXM-4-xC	434 Typ 2	Ø 35 / 25
Luminus	CHM-6-BH / CXM-6-xC	434 Typ 2	Ø 35 / 25
Luminus	CIM/CLM/CXM-9-xC	434 Typ 2	Ø 35 / 25
Luminus	CLM/CXM-9-xA	461 Typ 1	Ø 35 / 25
Luminus	CHM-9-BH	433 Typ 2	Ø 40 / 30
Luminus	CXM-11-xC	433 Typ 2	Ø 40 / 30
Luminus	CGM/CIM/CLM/CXM-14-xC	433 Typ 2	Ø 40 / 30
Luminus	CVM/CXM-18	453 Typ 1	Ø 40 / 30
Luminus	CXM-18 Gen6	431 Typ 1	Ø 40 / 30
Luminus	CGM/CIM/CLM/CXM-22-xC	431 Typ 2	Ø 50 / 35
Luminus	CVM/CXM-27	454 Typ 1	Ø 55 / 40
Luminus	CVM/CXM-32	458 Typ 1	Ø 65 / 50
Luminus	CVM-45	435 Typ 1	Ø 65 / 50
Luminus	CDM-6 / CDM-9Gen1 DtW	490 Typ L8	Ø 44 / 35
Luminus	CDM-9 Gen2 DtW	491 Typ L8	Ø 44 / 35
Luminus	CDM-14/CDM-18 DtW	491 Typ L8	Ø 44 / 35
Luminus	CTM-6 / CTM-9 TW	495 Typ L8	Ø 44 / 35
Luminus	CTM-14 TW	442 Typ L8	Ø 44 / 35
Luminus	CTM-14 RGBW	500 Typ L8-1	Ø 44 / 35
Luminus	CTM-18 Gen1 TW	442 Typ L8	Ø 44 / 35
Luminus	CTM-18 Gen2 TW	483 Typ L8	Ø 44 / 35
Luminus	CTM-22 TW	494 Typ Z1	Ø 49 / 35
Luxtech	COB-WD-10-1512	479 Typ 1	Ø 30 / 20
Luxtech	COB-WD-17-2420	491 Typ L8	Ø 44 / 35
Luxtech	COB-DN-16-2420	442 Typ L8	Ø 44 / 35
Nichia	NV..S007Z / NF..T012B	452 Typ 1	Ø 30 / 20
Nichia	NF..S024B / NT..S024B	452 Typ 1	Ø 30 / 20
Nichia	NJ..S024Z	452 Typ 1	Ø 30 / 20
Nichia	NV..L016Z / NV..L024Z	438 Typ 1	33 x 27 / 28
Nichia	NF..L036B / NF..L048B	438 Typ 1	33 x 27 / 28
Nichia	NF..L060B	438 Typ 1	33 x 27 / 28
Nichia	NV..J048Z / NF..J108B	463 Typ 1	Ø 50 / 35

Mögliche Halter / COB Kombinationen / Holder / COB combinations

COB Hersteller COB Supplier	COB Typ COB Type	Halter Holder	Abmessungen Dimensions
Nichia	NF..J130B	463 Typ 1	Ø 50 / 35
Nichia	NF..H306B	488 Typ 1 HV	Ø 65 / 50
Nichia	NJNWS012Z Tunable	495 Typ L8 HV	Ø 44 / 35
Nichia	NJCWL024Z Tunable	497 Typ L8 HV	Ø 44 / 35
Nichia	NVCWJ024Z Tunable	498 Typ L8 HV	Ø 44 / 35
Philips	Fortimo SLM12xx .. 1215 G7	452 Typ 1	Ø 30 / 20
Philips	Fortimo SLM12xx .. 1619 G7	480 Typ 1	33 x 27 / 28
Philips	Fortimo SLM12xx .. 2024 G7	432 Typ 2	Ø 50 / 35
Philips	Fortimo SLM12xx .. 2828 G7	431 Typ 2	Ø 50 / 35
Philips	Fortimo SLM12xx .. 1313 G7N	434 Typ 2	Ø 35 / 25
Philips	Fortimo SLM12xx .. 1919 G7N	433 Typ 2	Ø 40 / 30
Philips	Fortimo SLM12xx .. 2828 G7N	431 Typ 2	Ø 50 / 35
Philips	Fortimo SLM13xx .. 2024 G8 UHE	432 Typ 2	Ø 50 / 35
Philips	Fortimo SLM13xx .. 2828 G8 UHE	431 Typ 2	Ø 50 / 35
Philips	Fortimo L06A 1313 G7N Tunable	509 Typ L8	Ø 44 / 35
Philips	Fortimo L09A 1919 G7N Tunable	501 Typ L8	Ø 44 / 35
Prolight Opto	PASB	434 Typ 2	Ø 35 / 25
Prolight Opto	PASQ/PAPQ DimToWarm	434 Typ 2	Ø 35 / 25
Prolight Opto	PDSQ DimToWarm	490 Typ L8	Ø 44 / 35
Prolight Opto	PDSR DimToWarm	432 Typ 2	Ø 50 / 35
Prolight Opto	PDSJ Tunable	442 Typ L8	Ø 44 / 35
Samsung	LC 010C	434 Typ 1	Ø 40 / 30
Samsung	LC 020C / 030C / 040C	477 Typ 1	Ø 40 / 30
Samsung	LC 003D / 006D	434 Typ 2	Ø 35 / 25
Samsung	LC 009D / 013D	434 Typ 2	Ø 35 / 25
Samsung	LC 016D / 019D	477 Typ 1	Ø 40 / 30
Samsung	LC 026D / 033D	477 Typ 1	Ø 40 / 30
Samsung	LC 040D / 060D / 080D	431 Typ 2	Ø 50 / 35
Samsung	LC010T Tunable	501 Typ L8	Ø 44 / 35
Samsung	LC020T Tunable	501 Typ L8	Ø 44 / 35
Samsung	LC035T Tunable	502 Typ 1	Ø 50 / 35
Seoul	SAW* 0661	434 Typ 2	Ø 35 / 25
Seoul	SAW* 1062 / 1063	434 Typ 2	Ø 35 / 25

Mögliche Halter / COB Kombinationen / Holder / COB combinations

COB Hersteller COB Supplier	COB Typ COB Type	Halter Holder	Abmessungen Dimensions
Seoul	SAW* 1564 / 1565 / 1566	477 Typ 1	Ø 40 / 30
Seoul	SAW* 22AA / 2296	431 Typ 2	Ø 50 / 35
Seoul	SAW* 2298 / 226A	431 Typ 2	Ø 50 / 35
Seoul	SAW* 33EA / 33GC	458 Typ 1 HV	Ø 65 / 50
Tridonic	SLE ADV8 LES 04 / 06	434 Typ 2	Ø 35 / 25
Tridonic	SLE ADV8 LES 09	434 Typ 2	Ø 35 / 25
Tridonic	SLE ADV8 LES 13	433 Typ 2	Ø 40 / 30
Tridonic	SLE ADV8 LES 15	433 Typ 2	Ø 40 / 30
Tridonic	SLE ADV8 LES 17	431 Typ 1	Ø 50 / 35
Tridonic	SLE ADV8 LES 21	431 Typ 1	Ø 50 / 35
Tridonic	SLE SNC8 LES 06	434 Typ 2	Ø 35 / 25
Tridonic	SLE SNC8 LES 09	434 Typ 2	Ø 35 / 25
Tridonic	SLE SNC8 LES 15	433 Typ 2	Ø 40 / 30
VS Lighting	DMS 102 ***W	434 Typ 2	Ø 35 / 25
VS Lighting	DMS 124 ***W	434 Typ 2	Ø 35 / 25
VS Lighting	DMS 125 / 126 / 128 ***W	433 Typ 2	Ø 40 / 30
VS Lighting	DMS 120 ***W	431 Typ 2	Ø 50 / 35
VS Lighting	DMS 12C / 18B ***W	431 Typ 2	Ø 50 / 35
VS Lighting	DMS 1208J	433 Typ 2	Ø 40 / 30
VS Lighting	DMS 1212J / 1812J	431 Typ 2	Ø 50 / 35
VS Lighting	VCA 042	486 Typ Z4	Ø 35 / 25
VS Lighting	VCA2 122 / 123 / 124	486 Typ Z4	Ø 35 / 25
VS Lighting	VCA2 126 / 128	477 Typ 2	Ø 40 / 30
VS Lighting	VCA2 1211 / 1213	471 Typ 2	Ø 50 / 35
VS Lighting	TW 1914 Tunable	493 Typ L8	Ø 44 / 35
VS Lighting	TW 2820 Tunable	494 Typ Z1	Ø 49 / 35
VS Lighting	WU-M-618 DimToWarm	434 Typ 2	Ø 35 / 25
Xicato	XOB 04	486 Typ Z4	Ø 35 / 25
Xicato	XOB 06 (B)	486 Typ Z4	Ø 35 / 25
Xicato	XOB 09	434 Typ 2	Ø 35 / 25
Xicato	XOB 14	433 Typ 2	Ø 40 / 30
Xicato	XOB 23	431 Typ 2	Ø 50 / 35
Xicato	XOB 32	458 Typ 1	Ø 65 / 50

KHATOD® Optical Solutions for LED Lighting

COSMO

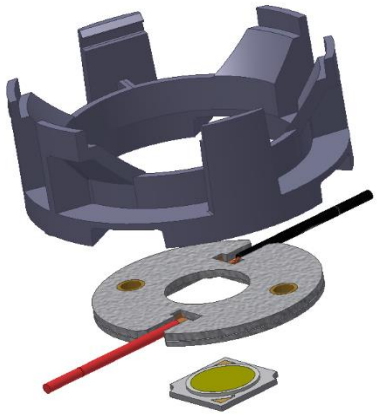

Khatod Linse Khatod lenses	PLL 2010.. 50mm PLL 2009.. 70mm PLL 2008.. 90mm
Hersteller Webseite Manufacturer website	www.khatod.com
LED Halter B+W LED Holder B+W	4xx / Typ K3 (PLL2010) 4xx / Typ Z1 (PLL2008/9)

4xx Typ K3

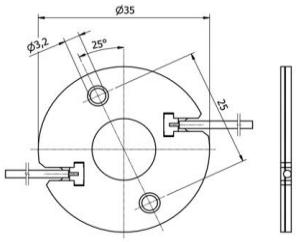

4xx Typ Z1

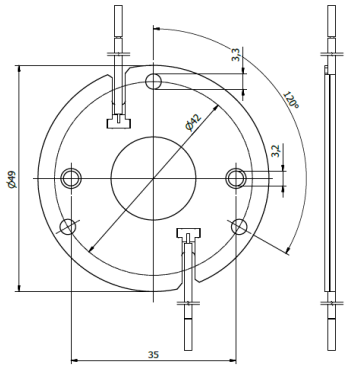

KEL 2010
lense holder for PLL2010

KEL2009
lense holder for PLL2009

KEL 2008
lense holder for PLL2008

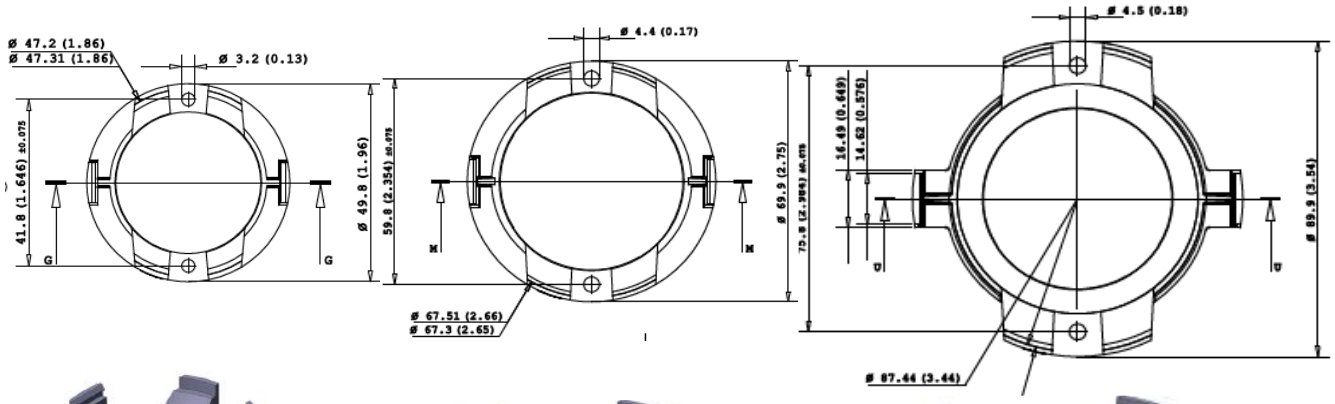

Mögliche Halter / COB Kombinationen / Holder / COB combinations **Khatod Cosmo**

COB Hersteller COB Supplier	COB Typ COB Type	Halter Holder	Linse Lense
Bridgelux	V3 HD / V4 HD Gen 7,8	460 Typ K3	PLL2010.. + KEL2010 50mm
Bridgelux	V6 HD Gen 7,8	464 Typ K3	PLL2010.. + KEL2010 50mm
Bridgelux	V9 HD / V11 HD Gen 7,8	496 Typ K3	PLL2010.. + KEL2010 50mm
Bridgelux	V6 Gen 8,9 (just 2 pads!)	460 Typ K3	PLL2010.. + KEL2010 50mm
Bridgelux	V8 Gen 7,8,9 (4 pads)	460 Typ K3	PLL2010.. + KEL2010 50mm
Bridgelux	V10 Gen 7,8,9	486 Typ K3	PLL2010.. + KEL2010 50mm
Bridgelux	V13 Gen 7,8,9	477 Typ Z1	PLL2009.. + KEL2009 70mm
Bridgelux	V15 Gen 7,8,9	456 Typ Z1	PLL2009.. + KEL2009 70mm
Bridgelux	V18 Gen 7,8,9	462 Typ Z1	PLL2008.. + KEL2008 90mm
Bridgelux	V22 Gen 7,8,9	431 Typ Z1	PLL2008.. + KEL2008 90mm
Bridgelux	Vesta DTW 6/9mm Gen 1,2	490 Typ K3	PLL2010.. + KEL2010 50mm
Bridgelux	Vesta DTW 13/15mm Gen 1,2	491 Typ Z1	PLL2009.. + KEL2009 70mm
Bridgelux	Vesta DTW 18mm Gen 1	505 Typ Z1	PLL2008.. + KEL2008 90mm
Bridgelux	Vesta Tunable 6mm Gen 2	504 Typ K3	PLL2010.. + KEL2010 50mm
Bridgelux	Vesta Tunable 9mm Gen 2	489 Typ K3	PLL2010.. + KEL2010 50mm
Bridgelux	Vesta Tunable 13mm Gen 2	492 Typ Z1	PLL2009.. + KEL2009 70mm
Bridgelux	Vesta Tunable 15mm Gen 2	482 Typ Z1	PLL2009.. + KEL2009 70mm
Bridgelux	Vesta Tunable 18mm Gen 2	483 Typ Z1	PLL2008.. + KEL2008 90mm
Bridgelux	Vesta Tunable 22mm Gen 2	494 Typ Z1	PLL2008.. + KEL2008 90mm
Citizen	CLU 028 / 02J / 02Q	434 Typ K3	PLL2010.. + KEL2010 50mm
Citizen	CLU 038 / 03H / 03J / 03Q	433 Typ Z1	PLL2009.. + KEL2009 70mm
Citizen	CLU 048 / 04H / 04J / 04Q	431 Typ Z1	PLL2008.. + KEL2008 90mm
Citizen	CLU 7R3	485 Typ K3	PLL2010.. + KEL2010 50mm
Citizen	CLU 702 / 703 / 7A2 /7A3 / 7B2	434 Typ K3	PLL2010.. + KEL2010 50mm
Citizen	CLU 712 / 713	477 Typ K3	PLL2010.. + KEL2010 50mm
Citizen	CLU 723	477 Typ K3	PLL2010.. + KEL2010 50mm
Citizen	CLU 733	471 Typ Z1	PLL2009.. + KEL2009 70mm
Citizen	LCN-C01B2 / C02B2 Tunable	481 Typ Z1	PLL2009.. + KEL2009 70mm
Citizen	LCN-C04B2 / C05B2 Tunable	481 Typ Z1	PLL2009.. + KEL2009 70mm
CREE	CHA 0304 / 0410 / 0612	434 Typ K3	PLL2010.. + KEL2010 50mm
CREE	CHA 0825	433 Typ K3	PLL2010.. + KEL2010 50mm
CREE	CMA 1303 / 1306	448 Typ K3	PLL2010.. + KEL2010 50mm
CREE	CMA 1516	441 Typ K3	PLL2010.. + KEL2010 50mm
CREE	CMA 1825 / 1840	437 Typ Z1	PLL2009.. + KEL2009 70mm
CREE	CMA 2550	439 Typ Z1	PLL2008.. + KEL2008 90mm

Mögliche Halter / COB Kombinationen / Holder / COB combinations Khatod Cosmo

COB Hersteller COB Supplier	COB Typ COB Type	Halter Holder	Linse Lense
CREE	CMA 3090	447 Typ Z1	PLL2008.. + KEL2008 90mm
CREE	CMB 1304 / 1306	448 Typ K3	PLL2010.. + KEL2010 50mm
CREE	CMB 1507 / 1510 / 1516	441 Typ K3	PLL2010.. + KEL2010 50mm
CREE	CMB 1818 / 1825	437 Typ Z1	PLL2009.. + KEL2009 70mm
CREE	CMB 1840	457 Typ Z1	PLL2009.. + KEL2009 70mm
CREE	CMB 2550	439 Typ Z1	PLL2008.. + KEL2008 90mm
CREE	CMB 3090	447 Typ Z1	PLL2008.. + KEL2008 90mm
CREE	CMT 1407 / 1412 / 1420	434 Typ K3	PLL2010.. + KEL2010 50mm
CREE	CMT 1922 / 1925 / 1930 / 1945	477 Typ Z1	PLL2009.. + KEL2009 70mm
CREE	CMT 2850 / 2870 / 2890	471 Typ Z1	PLL2008.. + KEL2008 90mm
CREE	CMU 1003 / 1006 / 1010 / 1013	434 Typ K3	PLL2010.. + KEL2010 50mm
CREE	CMU 1516 / 1519 / 1526 / 1532	433 Typ Z1	PLL2009.. + KEL2009 70mm
CREE	CMU 2236 / 2239 / 2258 / 2287	471 Typ Z1	PLL2008.. + KEL2008 90mm
CREE	CXB 1304 / 1310	448 Typ K3	PLL2010.. + KEL2010 50mm
CREE	CXB 1507 / 1512 / 1520	441 Typ K3	PLL2010.. + KEL2010 50mm
CREE	CXB 1816 / 1820	437 Typ Z1	PLL2009.. + KEL2009 70mm
CREE	CXB 1830	457 Typ Z1	PLL2009.. + KEL2009 70mm
CREE	CXB 2530 / 2540	439 Typ Z1	PLL2008.. + KEL2008 90mm
CREE	CXB 3050 / 3070	447 Typ Z1	PLL2008.. + KEL2008 90mm
Edison	2PHE 03 / 06 / 09 / 13	434 Typ K3	PLL2010.. + KEL2010 50mm
Edison	2PHE 15 / 18 / 24 / 30	433 Typ Z1	PLL2009.. + KEL2009 70mm
Edison	2PHE 55 / 60 / 83	431 Typ Z1	PLL2008.. + KEL2008 90mm
Lextar	PB 06 / 09 / 13	434 Typ K3	PLL2010.. + KEL2010 50mm
Lextar	PB 16 / 19 / 26	433 Typ Z1	PLL2009.. + KEL2009 70mm
Lextar	PB 38 / 54	431 Typ Z1	PLL2008.. + KEL2008 90mm
Lumileds	Luxeon 1202s / 1202HD	452 Typ K3	PLL2010.. + KEL2010 50mm
Lumileds	Luxeon 1202 / 1203 / 1204HD	480 Typ K3	PLL2010.. + KEL2010 50mm
Lumileds	Luxeon 1205HD	480 Typ K3	PLL2010.. + KEL2010 50mm
Lumileds	Luxeon 1204 / 1205	432 Typ Z1	PLL2009.. + KEL2009 70mm
Lumileds	Luxeon 1208 / 1210	432 Typ Z1	PLL2009.. + KEL2009 70mm
Lumileds	Luxeon 1211	431 Typ Z1	PLL2008.. + KEL2008 90mm
Lumileds	Luxeon 1213 / 1216 / 1812 / 1816	431 Typ Z1	PLL2008.. + KEL2008 90mm
Lumileds	CS COB L02 / L04	434 Typ K3	PLL2010.. + KEL2010 50mm
Lumileds	CS COB L06 / L08 / L10	433 Typ Z1	PLL2009.. + KEL2009 70mm

Mögliche Halter / COB Kombinationen / Holder / COB combinations Khatod Cosmo

COB Hersteller COB Supplier	COB Typ COB Type	Halter Holder	Linse Lense
Lumileds	CS COB L11 / L13 / L16	431 Typ Z1	PLL2008.. + KEL2008 90mm
Lumileds	CS COB R12 / R18	431 Typ Z1	PLL2008.. + KEL2008 90mm
Lumileds	CX Plus HD S01H4, S0xH6	448 Typ K3	PLL2010.. + KEL2010 50mm
Lumileds	CX Plus HD S04H9	4xx Typ K3	PLL2010.. + KEL2010 50mm
Lumileds	CX Plus S01Fx / S02Fx	448 Typ K3	PLL2010.. + KEL2010 50mm
Lumileds	CX Plus M02Fx / M03Fx	441 Typ K3	PLL2010.. + KEL2010 50mm
Lumileds	CX Plus L04Fx / L05Fx / L08Fx	437 Typ Z1	PLL2009.. + KEL2009 70mm
Luminus	CXM-3-xC	434 Typ K3	PLL2010.. + KEL2010 50mm
Luminus	CHM-4-BH / CXM-4-xC	434 Typ K3	PLL2010.. + KEL2010 50mm
Luminus	CHM-6-BH / CXM-6-xC	434 Typ K3	PLL2010.. + KEL2010 50mm
Luminus	CIM/CLM/CXM-9-xC	434 Typ K3	PLL2010.. + KEL2010 50mm
Luminus	CLM/CXM-9-xA	461 Typ K3	PLL2010.. + KEL2010 50mm
Luminus	CHM-9-BH	433 Typ K3	PLL2010.. + KEL2010 50mm
Luminus	CXM-11-xC	433 Typ Z1	PLL2009.. + KEL2009 70mm
Luminus	CGM/CIM/CLM/CXM-14-xC	433 Typ Z1	PLL2009.. + KEL2009 70mm
Luminus	CVM/CXM-18	453 Typ Z1	PLL2008.. + KEL2008 90mm
Luminus	CXM-18 Gen6	431 Typ Z1	PLL2008.. + KEL2008 90mm
Luminus	CGM/CIM/CLM/CXM-22-xC	431 Typ Z1	PLL2008.. + KEL2008 90mm
Luminus	CDM-6 / CDM-9Gen1 DtW	490 Typ K3	PLL2010.. + KEL2010 50mm
Luminus	CDM-14/CDM-18 DtW	491 Typ Z1	PLL2008.. + KEL2008 90mm
Luminus	CTM-6 / CTM-9 TW	495 Typ K3	PLL2010.. + KEL2010 50mm
Luminus	CTM-14 TW	442 Typ Z1	PLL2008.. + KEL2008 90mm
Luminus	CTM-14 RGBW	500 Typ Z1	PLL2009.. + KEL2009 70mm
Luminus	CTM-18 Gen1 TW	442 Typ Z1	PLL2008.. + KEL2008 90mm
Luminus	CTM-18 Gen2 TW	483 Typ Z1	PLL2008.. + KEL2008 90mm
Luminus	CTM-22 TW	494 Typ Z1	PLL2008.. + KEL2008 90mm
Luxtech	COB-WD-10-1512	479 Typ K3	PLL2010.. + KEL2010 50mm
Luxtech	COB-WD-17-2420	491 Typ Z1	PLL2009.. + KEL2009 70mm
Luxtech	COB-DN-16-2420	442 Typ Z1	PLL2009.. + KEL2009 70mm
Nichia	NV..S007Z / NF..T012B	452 Typ K3	PLL2010.. + KEL2010 50mm
Nichia	NF..S024B / NT..S024B	452 Typ K3	PLL2010.. + KEL2010 50mm
Nichia	NJ..S024Z	452 Typ K3	PLL2010.. + KEL2010 50mm
Nichia	NV..L016Z / NV..L024Z	438 Typ K3	PLL2010.. + KEL2010 50mm
Nichia	NV..J048Z / NF..J108B	463 Typ Z1	PLL2009.. + KEL2009 70mm

Mögliche Halter / COB Kombinationen / Holder / COB combinations Khatod Cosmo

COB Hersteller COB Supplier	COB Typ COB Type	Halter Holder	Linse Lense
Nichia	NF..J130B	463 Typ Z1	PLL2009.. + KEL2009 70mm
Nichia	NJNWS012Z Tunable	495 Typ K3 HV	PLL2010.. + KEL2010 50mm
Nichia	NJCWL024Z Tunable	497 Typ K3 HV	PLL2010.. + KEL2010 50mm
Philips	Fortimo SLM12xx .. 1215 G7	452 Typ K3	PLL2010.. + KEL2010 50mm
Philips	Fortimo SLM12xx .. 1619 G7	480 Typ K3	PLL2010.. + KEL2010 50mm
Philips	Fortimo SLM12xx .. 2024 G7	432 Typ Z1	PLL2009.. + KEL2009 70mm
Philips	Fortimo SLM12xx .. 2828 G7	431 Typ Z1	PLL2008.. + KEL2008 90mm
Philips	Fortimo SLM12xx .. 1313 G7N	434 Typ K3	PLL2010.. + KEL2010 50mm
Philips	Fortimo SLM12xx .. 1919 G7N	433 Typ Z1	PLL2009.. + KEL2009 70mm
Philips	Fortimo SLM12xx .. 2828 G7N	431 Typ Z1	PLL2008.. + KEL2008 90mm
Philips	Fortimo SLM13xx .. 2024 G8 UHE	432 Typ Z1	PLL2009.. + KEL2009 70mm
Philips	Fortimo SLM13xx .. 2828 G8 UHE	431 Typ Z1	PLL2008.. + KEL2008 90mm
Philips	Fortimo L06A 1313 G7N Tunable	509 Typ K3	PLL2010.. + KEL2010 50mm
Philips	Fortimo L09A 1919 G7N Tunable	501 Typ K3	PLL2010.. + KEL2010 50mm
Prolight Opto	PASB	434 Typ K3	PLL2010.. + KEL2010 50mm
Prolight Opto	PASQ/PAPQ DimToWarm	434 Typ K3	PLL2010.. + KEL2010 50mm
Prolight Opto	PDSQ DimToWarm	490 Typ K3	PLL2010.. + KEL2010 50mm
Prolight Opto	PDSR DimToWarm	432 Typ Z1	PLL2009.. + KEL2009 70mm
Prolight Opto	PDSJ Tunable	442 Typ Z1	PLL2009.. + KEL2009 70mm
Samsung	LC 010C	434 Typ K3	PLL2010.. + KEL2010 50mm
Samsung	LC 003D / 006D	434 Typ K3	PLL2010.. + KEL2010 50mm
Samsung	LC 009D / 013D	434 Typ K3	PLL2010.. + KEL2010 50mm
Samsung	LC 016D / 019D	477 Typ Z1	PLL2009.. + KEL2009 70mm
Samsung	LC 026D / 033D	477 Typ Z1	PLL2009.. + KEL2009 70mm
Samsung	LC 040D / 060D / 080D	431 Typ Z1	PLL2008.. + KEL2008 90mm
Samsung	LC010T Tunable	501 Typ K3	PLL2010.. + KEL2010 50mm
Samsung	LC020T Tunable	501 Typ Z1	PLL2009.. + KEL2009 70mm
Samsung	LC035T Tunable	502 Typ Z1	PLL2008.. + KEL2008 90mm
Seoul	SAW* 0661	434 Typ K3	PLL2010.. + KEL2010 50mm
Seoul	SAW* 1062 / 1063	434 Typ K3	PLL2010.. + KEL2010 50mm
Seoul	SAW* 1564 / 1565 / 1566	477 Typ Z1	PLL2009.. + KEL2009 70mm
Seoul	SAW* 22AA / 2296	431 Typ Z1	PLL2008.. + KEL2008 90mm
Seoul	SAW* 2298 / 226A	431 Typ Z1	PLL2008.. + KEL2008 90mm

Mögliche Halter / COB Kombinationen / Holder / COB combinations Khatod Cosmo

COB Hersteller COB Supplier	COB Typ COB Type	Halter Holder	Linse Lense
Tridonic	SLE ADV8 LES 04 / 06	434 Typ K3	PLL2010.. + KEL2010 50mm
Tridonic	SLE ADV8 LES 09	434 Typ K3	PLL2010.. + KEL2010 50mm
Tridonic	SLE ADV8 LES 13	433 Typ Z1	PLL2009.. + KEL2009 70mm
Tridonic	SLE ADV8 LES 15	433 Typ Z1	PLL2009.. + KEL2009 70mm
Tridonic	SLE SNC8 LES 06	434 Typ K3	PLL2010.. + KEL2010 50mm
Tridonic	SLE SNC8 LES 09	434 Typ K3	PLL2010.. + KEL2010 50mm
Tridonic	SLE SNC8 LES 15	433 Typ Z1	PLL2009.. + KEL2009 70mm
VS Lighting	DMS 102 ***W	434 Typ K3	PLL2010.. + KEL2010 50mm
VS Lighting	DMS 124 ***W	434 Typ K3	PLL2010.. + KEL2010 50mm
VS Lighting	DMS 125 / 126 / 128 ***W	433 Typ Z1	PLL2009.. + KEL2009 70mm
VS Lighting	DMS 120 ***W	431 Typ Z1	PLL2008.. + KEL2008 90mm
VS Lighting	DMS 12C / 18B ***W	431 Typ Z1	PLL2008.. + KEL2008 90mm
VS Lighting	DMS 1208J	433 Typ Z1	PLL2009.. + KEL2009 70mm
VS Lighting	DMS 1212J / 1812J	431 Typ Z1	PLL2008.. + KEL2008 90mm
VS Lighting	VCA 042	486 Typ K3	PLL2010.. + KEL2010 50mm
VS Lighting	VCA2 122 / 123 / 124	486 Typ K3	PLL2010.. + KEL2010 50mm
VS Lighting	VCA2 126 / 128	477 Typ Z1	PLL2009.. + KEL2009 70mm
VS Lighting	VCA2 1211 / 1213	471 Typ Z1	PLL2008.. + KEL2008 90mm
VS Lighting	TW 1914 Tunable	493 Typ Z1	PLL2009.. + KEL2009 70mm
VS Lighting	TW 2820 Tunable	494 Typ Z1	PLL2008.. + KEL2008 90mm
VS Lighting	WU-M-618 DimToWarm	434 Typ K3	PLL2010.. + KEL2010 50mm
Xicato	XOB 04	486 Typ K3	PLL2010.. + KEL2010 50mm
Xicato	XOB 06 (B)	486 Typ K3	PLL2010.. + KEL2010 50mm
Xicato	XOB 09	434 Typ K3	PLL2010.. + KEL2010 50mm
Xicato	XOB 14	433 Typ Z1	PLL2009.. + KEL2009 70mm
Xicato	XOB 23	431 Typ Z1	PLL2008.. + KEL2008 90mm

KHATOD® Optical Solutions for LED Lighting

EASY reflector system

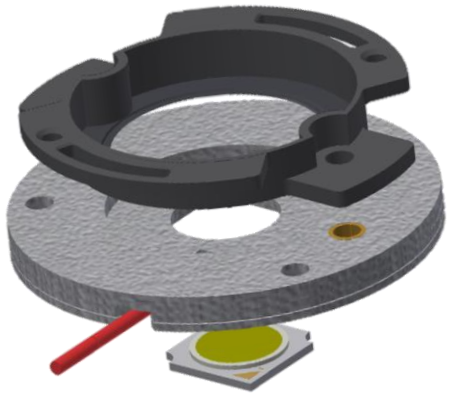

Khatod Reflektor Khatod reflector	KCLP 1856 / 1857 KCLP 1858 KCLP 1859
Hersteller Webseite Manufacturer website	www.khatod.com
LED Halter B+W LED Holder B+W	4xx / Typ Z2 4xx / Typ Z3

4xx Typ Z2

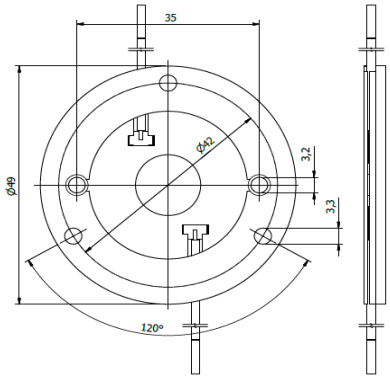

4xx Typ Z3

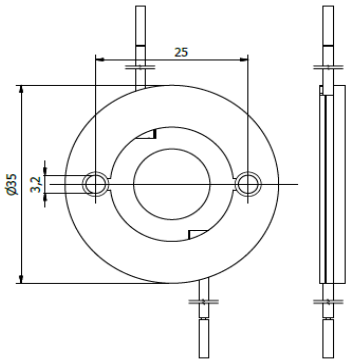

KCLP1856/1857
50mm reflector

KCLP1858
72mm reflector

KCLP1859
110 mm reflector

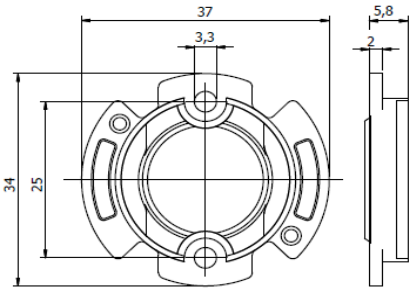

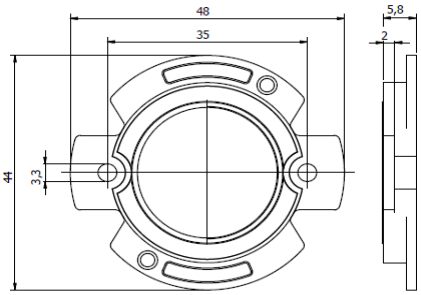

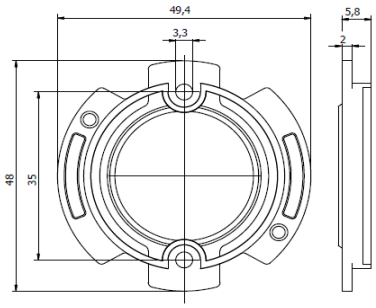

Mögliche Halter / COB Kombinationen / Holder / COB combinations **Khatod Easy**

COB Hersteller COB Supplier	COB Typ COB Type	Halter Holder	Reflektor Reflector
Bridgelux	**V3 HD / V4 HD Gen 7,8**	**460 Typ Z3**	**KCLP 1856 / 1857 (50mm)**
Bridgelux	**V6 HD Gen 7,8**	**464 Typ Z3**	**KCLP 1856 / 1857 (50mm)**
Bridgelux	**V9 HD / V11 HD Gen 7,8**	**496 Typ Z3**	**KCLP 1856 / 1857 (50mm)**
Bridgelux	**V6 Gen 8,9 (just 2 pads!)**	**460 Typ Z3**	**KCLP 1856 / 1857 (50mm)**
Bridgelux	**V8 Gen 7,8,9 (4 pads)**	**460 Typ Z3**	**KCLP 1856 / 1857 (50mm)**

Mögliche Halter / COB Kombinationen / Holder / COB combinations Khatod Easy

COB Hersteller COB Supplier	COB Typ COB Type	Halter Holder	Reflektor Reflector
Bridgelux	V10 Gen 7,8,9	486 Typ Z3	KCLP 1856 / 1857 (50mm)
Bridgelux	V13 Gen 7,8,9	477 Typ Z2	KCLP 1858 (72mm)
Bridgelux	V15 Gen 7,8,9	456 Typ Z2	KCLP 1858 (72mm)
Bridgelux	V18 Gen 7,8,9	462 Typ Z2	KCLP 1859 (110mm)
Bridgelux	Vesta DTW 6/9mm Gen 1,2	490 Typ Z3	KCLP 1856 / 1857 (50mm)
Bridgelux	Vesta DTW 13/15mm Gen 1,2	491 Typ Z2	KCLP 1859 (110mm)
Bridgelux	Vesta DTW 18mm Gen 1	505 Typ Z2	KCLP 1859 (110mm)
Bridgelux	Vesta Tunable 6mm Gen 2	504 Typ Z3	KCLP 1856 / 1857 (50mm)
Bridgelux	Vesta Tunable 9mm Gen 2	489 Typ Z3	KCLP 1856 / 1857 (50mm)
Bridgelux	Vesta Tunable 13mm Gen 2	492 Typ Z2	KCLP 1858 (72mm)
Bridgelux	Vesta Tunable 15mm Gen 2	482 Typ Z2	KCLP 1859 (110mm)
Bridgelux	Vesta Tunable 18mm Gen 2	483 Typ Z2	KCLP 1859 (110mm)
Citizen	CLU 028 / 02J / 02Q	434 Typ Z3	KCLP 1856 / 1857 (50mm)
Citizen	CLU 038 / 03H / 03J / 03Q	433 Typ Z2	KCLP 1858 (72mm)
Citizen	CLU 7R3	485 Typ Z3	KCLP 1856 / 1857 (50mm)
Citizen	CLU 702 / 703 / 7A2 /7A3 / 7B2	434 Typ Z3	KCLP 1856 / 1857 (50mm)
Citizen	CLU 712 / 713	477 Typ Z3	KCLP 1856 / 1857 (50mm)
Citizen	CLU 723	477 Typ Z3	KCLP 1856 / 1857 (50mm)
Citizen	CLU 733	471 Typ Z2	KCLP 1858 (72mm)
Citizen	LCN-C01B2 / C02B2 Tunable	481 Typ Z2	KCLP 1858 (72mm)
Citizen	LCN-C04B2 / C05B2 Tunable	481 Typ Z2	KCLP 1858 (72mm)
CREE	CHA 0304 / 0410 / 0612	434 Typ Z3	KCLP 1856 / 1857 (50mm)
CREE	CHA 0825	433 Typ Z3	KCLP 1856 / 1857 (50mm)
CREE	CMA 1303 / 1306	448 Typ Z3	KCLP 1856 / 1857 (50mm)
CREE	CMA 1516	441 Typ Z3	KCLP 1856 / 1857 (50mm)
CREE	CMA 1825 / 1840	437 Typ Z2	KCLP 1858 (72mm)
CREE	CMA 2550	439 Typ Z2	KCLP 1859 (110mm)
CREE	CMB 1304 / 1306	448 Typ Z3	KCLP 1856 / 1857 (50mm)
CREE	CMB 1507 / 1510 / 1516	441 Typ Z3	KCLP 1856 / 1857 (50mm)
CREE	CMB 1818 / 1825	437 Typ Z2	KCLP 1858 (72mm)
CREE	CMB 1840	457 Typ Z2	KCLP 1858 (72mm)
CREE	CMB 2550	439 Typ Z2	KCLP 1859 (110mm)
CREE	CMT 1407 / 1412 / 1420	434 Typ Z3	KCLP 1856 / 1857 (50mm)
CREE	CMT 1922 / 1925 / 1930 / 1945	477 Typ Z2	KCLP 1858 (72mm)
CREE	CMU 1003 / 1006 / 1010 / 1013	434 Typ Z3	KCLP 1856 / 1857 (50mm)

Mögliche Halter / COB Kombinationen / Holder / COB combinations Khatod Easy

COB Hersteller COB Supplier	COB Typ COB Type	Halter Holder	Reflektor Reflector
CREE	CMU 1516 / 1519 / 1526 / 1532	433 Typ Z2	KCLP 1858 (72mm)
CREE	CXB 1304 / 1310	448 Typ Z3	KCLP 1856 / 1857 (50mm)
CREE	CXB 1507 / 1512 / 1520	441 Typ Z3	KCLP 1856 / 1857 (50mm)
CREE	CXB 1816 / 1820	437 Typ Z2	KCLP 1858 (72mm)
CREE	CXB 1830	457 Typ Z2	KCLP 1858 (72mm)
CREE	CXB 2530 / 2540	439 Typ Z2	KCLP 1859 (110mm)
Edison	2PHE 03 / 06 / 09 / 13	434 Typ Z3	KCLP 1856 / 1857 (50mm)
Lextar	PB 06 / 09 / 13	434 Typ Z3	KCLP 1856 / 1857 (50mm)
Lextar	PB 16 / 19 / 26	433 Typ Z2	KCLP 1858 (72mm)
Lumileds	Luxeon 1202s / 1202HD	452 Typ Z3	KCLP 1856 / 1857 (50mm)
Lumileds	Luxeon 1202 / 1203 / 1204HD	480 Typ Z3	KCLP 1856 / 1857 (50mm)
Lumileds	Luxeon 1205HD	480 Typ Z3	KCLP 1856 / 1857 (50mm)
Lumileds	Luxeon 1204 / 1205	432 Typ Z2	KCLP 1858 (72mm)
Lumileds	Luxeon 1208 / 1210	432 Typ Z2	KCLP 1858 (72mm)
Lumileds	Luxeon 1211	431 Typ Z2	KCLP 1859 (110mm)
Lumileds	CS COB L02 / L04	434 Typ Z3	KCLP 1856 / 1857 (50mm)
Lumileds	CS COB L06 / L08 / L10	433 Typ Z2	KCLP 1858 (72mm)
Lumileds	CX Plus HD S01H4, S0xH6	448 Typ Z3	KCLP 1856 / 1857 (50mm)
Lumileds	CX Plus HD S04H9	4xx Typ Z3	KCLP 1856 / 1857 (50mm)
Lumileds	CX Plus S01Fx / S02Fx	448 Typ Z3	KCLP 1856 / 1857 (50mm)
Lumileds	CX Plus M02Fx / M03Fx	441 Typ Z3	KCLP 1856 / 1857 (50mm)
Lumileds	CX Plus L04Fx / L05Fx / L08Fx	437 Typ Z2	KCLP 1858 (72mm)
Luminus	CXM-3-xC	434 Typ Z3	KCLP 1856 / 1857 (50mm)
Luminus	CHM-4-BH / CXM-4-xC	434 Typ Z3	KCLP 1856 / 1857 (50mm)
Luminus	CHM-6-BH / CXM-6-xC	434 Typ Z3	KCLP 1856 / 1857 (50mm)
Luminus	CIM/CLM/CXM-9-xC	434 Typ Z3	KCLP 1856 / 1857 (50mm)
Luminus	CLM/CXM-9-xA	461 Typ Z3	KCLP 1856 / 1857 (50mm)
Luminus	CHM-9-BH	433 Typ Z3	KCLP 1856 / 1857 (50mm)
Luminus	CXM-11-xC	433 Typ Z2	KCLP 1858 (72mm)
Luminus	CGM/CIM/CLM/CXM-14-xC	433 Typ Z2	KCLP 1858 (72mm)
Luminus	CVM/CXM-18	453 Typ Z2	KCLP 1859 (110mm)
Luminus	CXM-18 Gen6	431 Typ Z2	KCLP 1859 (110mm)
Luminus	CDM-6 / CDM-9Gen1 DtW	490 Typ Z3	KCLP 1856 / 1857 (50mm)

Mögliche Halter / COB Kombinationen / Holder / COB combinations **Khatod Easy**

COB Hersteller COB Supplier	COB Typ COB Type	Halter Holder	Reflektor Reflector
Luminus	CDM-14/CDM-18 DtW	491 Typ Z2	KCLP 1859 (110mm)
Luminus	CTM-6 / CTM-9 TW	495 Typ Z3	KCLP 1856 / 1857 (50mm)
Luminus	CTM-14 TW	442 Typ Z2	KCLP 1859 (110mm)
Luminus	CTM-14 RGBW	500 Typ Z2	KCLP 1858 (72mm)
Luminus	CTM-18 Gen1 TW	442 Typ Z2	KCLP 1859 (110mm)
Luminus	CTM-18 Gen2 TW	483 Typ Z2	KCLP 1859 (110mm)
Luxtech	COB-WD-10-1512	479 Typ Z3	KCLP 1856 / 1857 (50mm)
Luxtech	COB-WD-17-2420	491 Typ Z2	KCLP 1858 (72mm)
Luxtech	COB-DN-16-2420	442 Typ Z2	KCLP 1858 (72mm)
Nichia	NV..S007Z / NF..T012B	452 Typ Z3	KCLP 1856 / 1857 (50mm)
Nichia	NF..S024B / NT..S024B	452 Typ Z3	KCLP 1856 / 1857 (50mm)
Nichia	NJ..S024Z	452 Typ Z3	KCLP 1856 / 1857 (50mm)
Nichia	NV..L016Z / NV..L024Z	438 Typ Z3	KCLP 1856 / 1857 (50mm)
Nichia	NV..J048Z / NF..J108B	463 Typ Z2	KCLP 1858 (72mm)
Nichia	NF..J130B	463 Typ Z2	KCLP 1858 (72mm)
Nichia	NJNWS012Z Tunable	495 Typ Z3 HV	KCLP 1856 / 1857 (50mm)
Nichia	NJCWL024Z Tunable	497 Typ Z3 HV	KCLP 1856 / 1857 (50mm)
Philips	Fortimo SLM12xx .. 1215 G7	452 Typ Z3	KCLP 1856 / 1857 (50mm)
Philips	Fortimo SLM12xx .. 1619 G7	480 Typ Z3	KCLP 1856 / 1857 (50mm)
Philips	Fortimo SLM12xx .. 2024 G7	432 Typ Z2	KCLP 1858 (72mm)
Philips	Fortimo SLM12xx .. 1313 G7N	434 Typ Z3	KCLP 1856 / 1857 (50mm)
Philips	Fortimo SLM12xx .. 1919 G7N	433 Typ Z2	KCLP 1858 (72mm)
Philips	Fortimo SLM13xx .. 2024 G8 UHE	432 Typ Z2	KCLP 1858 (72mm)
Philips	Fortimo L06A 1313 G7N Tunable	509 Typ Z3	KCLP 1856 / 1857 (50mm)
Philips	Fortimo L09A 1919 G7N Tunable	501 Typ Z3	KCLP 1856 / 1857 (50mm)
Prolight Opto	PASB	434 Typ Z3	KCLP 1856 / 1857 (50mm)
Prolight Opto	PASQ/PAPQ DimToWarm	434 Typ Z3	KCLP 1856 / 1857 (50mm)
Prolight Opto	PDSQ DimToWarm	490 Typ Z3	KCLP 1856 / 1857 (50mm)
Prolight Opto	PDSR DimToWarm	432 Typ Z2	KCLP 1858 (72mm)
Prolight Opto	PDSJ Tunable	442 Typ Z2	KCLP 1858 (72mm)
Samsung	LC 010C	434 Typ Z3	KCLP 1856 / 1857 (50mm)
Samsung	LC 003D / 006D	434 Typ Z3	KCLP 1856 / 1857 (50mm)

Mögliche Halter / COB Kombinationen / Holder / COB combinations Khatod Easy

COB Hersteller COB Supplier	COB Typ COB Type	Halter Holder	Reflektor Reflector
Samsung	LC 009D / 013D	434 Typ Z3	KCLP 1856 / 1857 (50mm)
Samsung	LC010T Tunable	501 Typ Z3	KCLP 1856 / 1857 (50mm)
Samsung	LC020T Tunable	501 Typ Z2	KCLP 1858 (72mm)
Seoul	SAW* 0661	434 Typ Z3	KCLP 1856 / 1857 (50mm)
Seoul	SAW* 1062 / 1063	434 Typ Z3	KCLP 1856 / 1857 (50mm)
Seoul	SAW* 1564 / 1565 / 1566	477 Typ Z2	KCLP 1858 (72mm)
Tridonic	SLE ADV8 LES 04 / 06	434 Typ Z3	KCLP 1856 / 1857 (50mm)
Tridonic	SLE ADV8 LES 09	434 Typ Z3	KCLP 1856 / 1857 (50mm)
Tridonic	SLE ADV8 LES 13	433 Typ Z2	KCLP 1858 (72mm)
Tridonic	SLE ADV8 LES 15	433 Typ Z2	KCLP 1858 (72mm)
Tridonic	SLE SNC8 LES 06	434 Typ Z3	KCLP 1856 / 1857 (50mm)
Tridonic	SLE SNC8 LES 09	434 Typ Z3	KCLP 1856 / 1857 (50mm)
Tridonic	SLE SNC8 LES 15	433 Typ Z2	KCLP 1858 (72mm)
VS Lighting	DMS 102 ***W	434 Typ Z3	KCLP 1856 / 1857 (50mm)
VS Lighting	DMS 124 ***W	434 Typ Z3	KCLP 1856 / 1857 (50mm)
VS Lighting	DMS 125 / 126 / 128 ***W	433 Typ Z2	KCLP 1858 (72mm)
VS Lighting	DMS 120 ***W	431 Typ Z2	KCLP 1859 (110mm)
VS Lighting	DMS 1208J	433 Typ Z2	KCLP 1858 (72mm)
VS Lighting	VCA 042	486 Typ Z3	KCLP 1856 / 1857 (50mm)
VS Lighting	VCA2 122 / 123 / 124	486 Typ Z3	KCLP 1856 / 1857 (50mm)
VS Lighting	VCA2 126 / 128	477 Typ Z2	KCLP 1858 (72mm)
VS Lighting	TW 1914 Tunable	493 Typ Z2	KCLP 1858 (72mm)
VS Lighting	WU-M-618 DimToWarm	434 Typ Z3	KCLP 1856 / 1857 (50mm)
Xicato	XOB 04	486 Typ Z3	KCLP 1856 / 1857 (50mm)
Xicato	XOB 06 (B)	486 Typ Z3	KCLP 1856 / 1857 (50mm)
Xicato	XOB 09	434 Typ Z3	KCLP 1856 / 1857 (50mm)
Xicato	XOB 14	433 Typ Z2	KCLP 1858 (72mm)

KHATOD®
Optical Solutions for LED Lighting

EASY
reflector system
Asymmetric

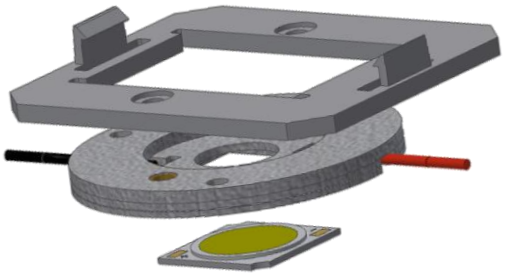

Khatod Adapter
Khatod adaptor
KCLP 1799

Hersteller Webseite
Manufacturer website
www.khatod.com

LED Halter B+W
LED Holder B+W
4xx / Typ Z2

4xx Typ Z2

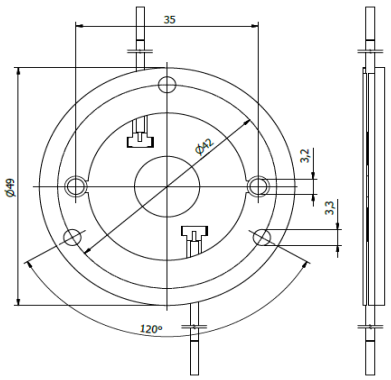

KCLP 1799

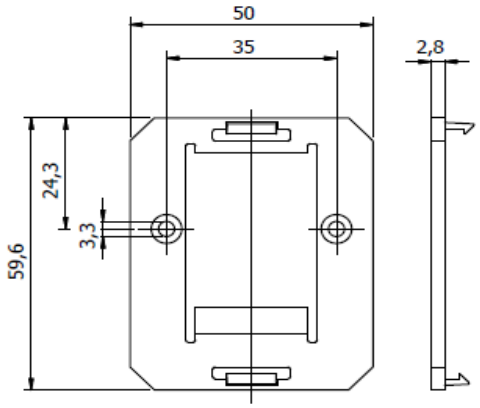

Mögliche Halter / COB Kombinationen / Holder / COB combinations **Khatod Easy asym.**

COB Hersteller COB Supplier	COB Typ COB Type	Halter Holder	Reflektor Reflector
Bridgelux	V9 HD / V11 HD Gen 7,8	496 Typ Z2	KCLP 1799
Bridgelux	V10 Gen 7,8,9	486 Typ Z2	KCLP 1799
Bridgelux	V13 Gen 7,8,9	477 Typ Z2	KCLP 1799
Bridgelux	V15 Gen 7,8,9	456 Typ Z2	KCLP 1799
Bridgelux	V18 Gen 7,8,9	462 Typ Z2	KCLP 1799
Bridgelux	Vesta DTW 6/9mm Gen 1,2	490 Typ Z2	KCLP 1799
Bridgelux	Vesta DTW 13/15mm Gen 1,2	491 Typ Z2	KCLP 1799
Bridgelux	Vesta DTW 18mm Gen 1	505 Typ Z2	KCLP 1799
Bridgelux	Vesta Tunable 9mm Gen 2	489 Typ Z2	KCLP 1799
Bridgelux	Vesta Tunable 13mm Gen 2	492 Typ Z2	KCLP 1799
Bridgelux	Vesta Tunable 15mm Gen 2	482 Typ Z2	KCLP 1799
Bridgelux	Vesta Tunable 18mm Gen 2	483 Typ Z2	KCLP 1799
Citizen	CLU 028 / 02J / 02Q	434 Typ Z2	KCLP 1799

Mögliche Halter / COB Kombinationen / Holder / COB combinations **Khatod Easy asym.**

COB Hersteller COB Supplier	COB Typ COB Type	Halter Holder	Reflektor Reflector
Citizen	CLU 038 / 03H / 03J / 03Q	433 Typ Z2	KCLP 1799
Citizen	CLU 723	477 Typ Z2	KCLP 1799
Citizen	CLU 733	471 Typ Z2	KCLP 1799
Citizen	LCN-C01B2 / C02B2 Tunable	481 Typ Z2	KCLP 1799
Citizen	LCN-C04B2 / C05B2 Tunable	481 Typ Z2	KCLP 1799
CREE	CMA 1516	441 Typ Z2	KCLP 1799
CREE	CMA 1825 / 1840	437 Typ Z2	KCLP 1799
CREE	CMA 2550	439 Typ Z2	KCLP 1799
CREE	CMB 1507 / 1510 / 1516	441 Typ Z2	KCLP 1799
CREE	CMB 1818 / 1825	437 Typ Z2	KCLP 1799
CREE	CMB 1840	457 Typ Z2	KCLP 1799
CREE	CMB 2550	439 Typ Z2	KCLP 1799
CREE	CMT 1407 / 1412 / 1420	434 Typ Z2	KCLP 1799
CREE	CMT 1922 / 1925 / 1930 / 1945	477 Typ Z2	KCLP 1799
CREE	CMU 1003 / 1006 / 1010 / 1013	434 Typ Z2	KCLP 1799
CREE	CMU 1516 / 1519 / 1526 / 1532	433 Typ Z2	KCLP 1799
CREE	CXB 1507 / 1512 / 1520	441 Typ Z2	KCLP 1799
CREE	CXB 1816 / 1820	437 Typ Z2	KCLP 1799
CREE	CXB 1830	457 Typ Z2	KCLP 1799
CREE	CXB 2530 / 2540	439 Typ Z2	KCLP 1799
Edison	2PHE 03 / 06 / 09 / 13	434 Typ Z2	KCLP 1799
Edison	2PHE 15 / 18 / 24 / 30	433 Typ Z2	KCLP 1799
Lextar	PB 06 / 09 / 13	434 Typ Z2	KCLP 1799
Lextar	PB 16 / 19 / 26	433 Typ Z2	KCLP 1799
Lumileds	Luxeon 1202 / 1203 / 1204HD	480 Typ Z2	KCLP 1799
Lumileds	Luxeon 1205HD	480 Typ Z2	KCLP 1799
Lumileds	Luxeon 1204 / 1205	432 Typ Z2	KCLP 1799
Lumileds	Luxeon 1208 / 1210	432 Typ Z2	KCLP 1799
Lumileds	Luxeon 1211	431 Typ Z2	KCLP 1799
Lumileds	CS COB L02 / L04	434 Typ Z2	KCLP 1799
Lumileds	CS COB L06 / L08 / L10	433 Typ Z2	KCLP 1799
Lumileds	CX Plus HD S04H9	4xx Typ Z2	KCLP 1799
Lumileds	CX Plus M02Fx / M03Fx	441 Typ Z2	KCLP 1799

Mögliche Halter / COB Kombinationen / Holder / COB combinations **Khatod Easy asym.**

COB Hersteller COB Supplier	COB Typ COB Type	Halter Holder	Reflektor Reflector
Lumileds	CX Plus L04Fx / L05Fx / L08Fx	437 Typ Z2	KCLP 1799
Luminus	CIM/CLM/CXM-9-xC	434 Typ Z2	KCLP 1799
Luminus	CLM/CXM-9-xA	461 Typ Z2	KCLP 1799
Luminus	CHM-9-BH	433 Typ Z2	KCLP 1799
Luminus	CXM-11-xC	433 Typ Z2	KCLP 1799
Luminus	CGM/CIM/CLM/CXM-14-xC	433 Typ Z2	KCLP 1799
Luminus	CVM/CXM-18	453 Typ Z2	KCLP 1799
Luminus	CXM-18 Gen6	431 Typ Z2	KCLP 1799
Luminus	CDM-6 / CDM-9Gen1 DtW	490 Typ Z2	KCLP 1799
Luminus	CDM-9 Gen2 DtW	491 Typ Z2	KCLP 1799
Luminus	CDM-14/CDM-18 DtW	491 Typ Z2	KCLP 1799
Luminus	CTM-6 / CTM-9 TW	495 Typ Z2	KCLP 1799
Luminus	CTM-14 TW	442 Typ Z2	KCLP 1799
Luminus	CTM-14 RGBW	500 Typ Z2	KCLP 1799
Luminus	CTM-18 Gen1 TW	442 Typ Z2	KCLP 1799
Luminus	CTM-18 Gen2 TW	483 Typ Z2	KCLP 1799
Luxtech	COB-WD-17-2420	491 Typ Z2	KCLP 1799
Luxtech	COB-DN-16-2420	442 Typ Z2	KCLP 1799
Nichia	NV..L016Z / NV..L024Z	438 Typ Z2	KCLP 1799
Nichia	NF..L036B / NF..L048B	438 Typ Z2	KCLP 1799
Nichia	NF..L060B	438 Typ Z2	KCLP 1799
Nichia	NV..J048Z / NF..J108B	463 Typ Z2	KCLP 1799
Nichia	NF..J130B	463 Typ Z2	KCLP 1799
Nichia	NVCWJ024Z Tunable	498 Typ Z2 HV	KCLP 1799
Philips	Fortimo SLM12xx .. 1619 G7	480 Typ Z2	KCLP 1799
Philips	Fortimo SLM12xx .. 2024 G7	432 Typ Z2	KCLP 1799
Philips	Fortimo SLM12xx .. 1313 G7N	434 Typ Z2	KCLP 1799
Philips	Fortimo SLM12xx .. 1919 G7N	433 Typ Z2	KCLP 1799
Philips	Fortimo SLM13xx .. 2024 G8 UHE	432 Typ Z2	KCLP 1799
Philips	Fortimo L09A 1919 G7N Tunable	501 Typ Z2	KCLP 1799
Prolight Opto	PASB	434 Typ Z2	KCLP 1799
Prolight Opto	PASQ/PAPQ DimToWarm	434 Typ Z2	KCLP 1799

Mögliche Halter / COB Kombinationen / Holder / COB combinations **Khatod Easy asym.**

COB Hersteller COB Supplier	COB Typ COB Type	Halter Holder	Reflektor Reflector
Prolight Opto	PDSR DimToWarm	432 Typ Z2	KCLP 1799
Prolight Opto	PDSJ Tunable	442 Typ Z2	KCLP 1799
Samsung	LC 020C / 030C / 040C	477 Typ Z2	KCLP 1799
Samsung	LC 003D / 006D	434 Typ Z2	KCLP 1799
Samsung	LC 009D / 013D	434 Typ Z2	KCLP 1799
Samsung	LC 016D / 019D	477 Typ Z2	KCLP 1799
Samsung	LC 026D / 033D	477 Typ Z2	KCLP 1799
Samsung	LC010T Tunable	501 Typ Z2	KCLP 1799
Samsung	LC020T Tunable	501 Typ Z2	KCLP 1799
Seoul	SAW* 1062 / 1063	434 Typ Z2	KCLP 1799
Seoul	SAW* 1564 / 1565 / 1566	477 Typ Z2	KCLP 1799
Tridonic	SLE ADV8 LES 04 / 06	434 Typ Z2	KCLP 1799
Tridonic	SLE ADV8 LES 09	434 Typ Z2	KCLP 1799
Tridonic	SLE ADV8 LES 13	433 Typ Z2	KCLP 1799
Tridonic	SLE ADV8 LES 15	433 Typ Z2	KCLP 1799
Tridonic	SLE SNC8 LES 09	434 Typ Z2	KCLP 1799
Tridonic	SLE SNC8 LES 15	433 Typ Z2	KCLP 1799
VS Lighting	DMS 124 ***W	434 Typ Z2	KCLP 1799
VS Lighting	DMS 125 / 126 / 128 ***W	433 Typ Z2	KCLP 1799
VS Lighting	DMS 120 ***W	431 Typ Z2	KCLP 1799
VS Lighting	DMS 1208J	433 Typ Z2	KCLP 1799
VS Lighting	VCA2 122 / 123 / 124	486 Typ Z2	KCLP 1799
VS Lighting	VCA2 126 / 128	477 Typ Z2	KCLP 1799
VS Lighting	TW 1914 Tunable	493 Typ Z2	KCLP 1799
VS Lighting	WU-M-618 DimToWarm	434 Typ Z2	KCLP 1799
Xicato	XOB 09	434 Typ Z2	KCLP 1799
Xicato	XOB 14	433 Typ Z2	KCLP 1799

KHATOD® Optical Solutions for LED Lighting

PL50SIL Silicone Lense

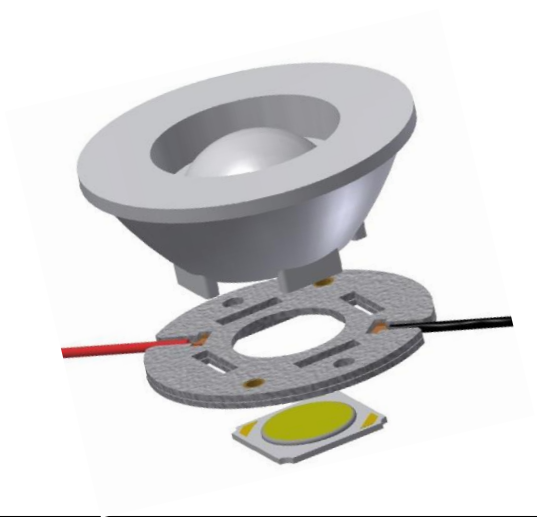

Khatod Linse
Khatod lense — PL50SIL

Hersteller Webseite
Manufacturer website — www.khatod.com

LED Halter B+W
LED Holder B+W — 4xx / Typ K2

4xx Typ K2

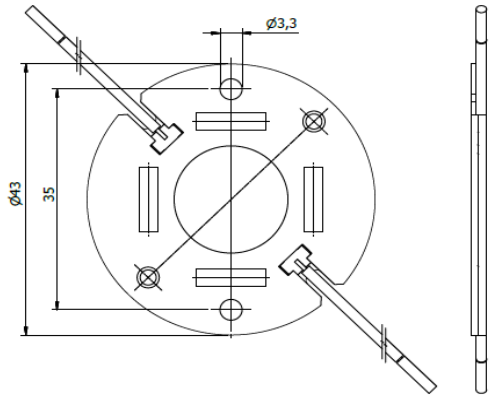

PL50SIL

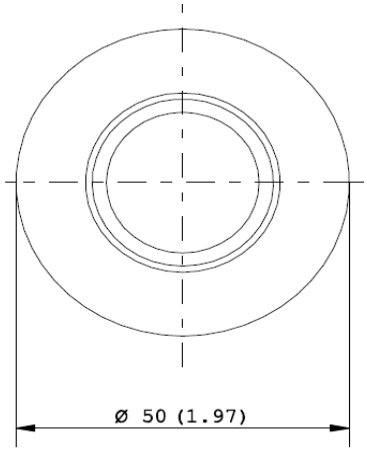

Mögliche Halter / COB Kombinationen / Holder / COB combinations — Khatod PL50SIL

COB Hersteller COB Supplier	COB Typ COB Type	Halter Holder	Linse Lense
Bridgelux	V3 HD / V4 HD Gen 7,8	460 Typ K2	PL50SIL
Bridgelux	V6 HD Gen 7,8	464 Typ K2	PL50SIL
Bridgelux	V9 HD / V11 HD Gen 7,8	496 Typ K2	PL50SIL
Bridgelux	V6 Gen 8,9 (just 2 pads!)	460 Typ K2	PL50SIL
Bridgelux	V8 Gen 7,8,9 (4 pads)	460 Typ K2	PL50SIL
Bridgelux	V10 Gen 7,8,9	486 Typ K2	PL50SIL
Bridgelux	V13 Gen 7,8,9	477 Typ K2	PL50SIL
Bridgelux	V15 Gen 7,8,9	456 Typ K2	PL50SIL
Bridgelux	Vesta DTW 6/9mm Gen 1,2	490 Typ K2	PL50SIL
Bridgelux	Vesta Tunable 6mm Gen 2	504 Typ K2	PL50SIL
Bridgelux	Vesta Tunable 9mm Gen 2	489 Typ K2	PL50SIL
Bridgelux	Vesta Tunable 13mm Gen 2	492 Typ K2	PL50SIL
Bridgelux	Vesta Tunable 15mm Gen 2	482 Typ K2	PL50SIL

Mögliche Halter / COB Kombinationen / Holder / COB combinations **Khatod PL50SIL**

COB Hersteller COB Supplier	COB Typ COB Type	Halter Holder	Linse Lense
Citizen	CLU 028 / 02J / 02Q	434 Typ K2	PL50SIL
Citizen	CLU 038 / 03H / 03J / 03Q	433 Typ K2	PL50SIL
Citizen	CLU 7L3 / 7S3	467 Typ K2	PL50SIL
Citizen	CLU 7R3	485 Typ K2	PL50SIL
Citizen	CLU 702 / 703 / 7A2 /7A3 / 7B2	434 Typ K2	PL50SIL
Citizen	CLU 712 / 713	477 Typ K2	PL50SIL
Citizen	CLU 723	477 Typ K2	PL50SIL
Citizen	LCN-C01B2 / C02B2 Tunable	481 Typ K2	PL50SIL
Citizen	LCN-C04B2 / C05B2 Tunable	481 Typ K2	PL50SIL
CREE	CHA 0304 / 0410 / 0612	434 Typ K2	PL50SIL
CREE	CHA 0825	433 Typ K2	PL50SIL
CREE	CMA 1303 / 1306	448 Typ K2	PL50SIL
CREE	CMA 1516	441 Typ K2	PL50SIL
CREE	CMA 1825 / 1840	437 Typ K2	PL50SIL
CREE	CMB 1304 / 1306	448 Typ K2	PL50SIL
CREE	CMB 1507 / 1510 / 1516	441 Typ K2	PL50SIL
CREE	CMB 1818 / 1825	437 Typ K2	PL50SIL
CREE	CMB 1840	457 Typ K2	PL50SIL
CREE	CMT 1407 / 1412 / 1420	434 Typ K2	PL50SIL
CREE	CMT 1922 / 1925 / 1930 / 1945	477 Typ K2	PL50SIL
CREE	CMU 1003 / 1006 / 1010 / 1013	434 Typ K2	PL50SIL
CREE	CMU 1516 / 1519 / 1526 / 1532	433 Typ K2	PL50SIL
CREE	CXB 1304 / 1310	448 Typ K2	PL50SIL
CREE	CXB 1507 / 1512 / 1520	441 Typ K2	PL50SIL
CREE	CXB 1816 / 1820	437 Typ K2	PL50SIL
CREE	CXB 1830	457 Typ K2	PL50SIL
Edison	2PHE 03 / 06 / 09 / 13	434 Typ K2	PL50SIL
Edison	2PHE 15 / 18 / 24 / 30	433 Typ K2	PL50SIL
Lextar	PB 06 / 09 / 13	434 Typ K2	PL50SIL
Lextar	PB 16 / 19 / 26	433 Typ K2	PL50SIL
Lumileds	Luxeon 1202s / 1202HD	452 Typ K2	PL50SIL
Lumileds	Luxeon 1202 / 1203 / 1204HD	480 Typ K2	PL50SIL

Mögliche Halter / COB Kombinationen / Holder / COB combinations Khatod PL50SIL

COB Hersteller COB Supplier	COB Typ COB Type	Halter Holder	Linse Lense
Lumileds	Luxeon 1205HD	480 Typ K2	PL50SIL
Lumileds	CS COB L02 / L04	434 Typ K2	PL50SIL
Lumileds	CS COB L06 / L08 / L10	433 Typ K2	PL50SIL
Lumileds	CX Plus HD S01H4, S0xH6	448 Typ K2	PL50SIL
Lumileds	CX Plus HD S04H9	4xx Typ K2	PL50SIL
Lumileds	CX Plus S01Fx / S02Fx	448 Typ K2	PL50SIL
Lumileds	CX Plus M02Fx / M03Fx	441 Typ K2	PL50SIL
Lumileds	CX Plus L04Fx / L05Fx / L08Fx	437 Typ K2	PL50SIL
Luminus	CXM-3-xC	434 Typ K2	PL50SIL
Luminus	CHM-4-BH / CXM-4-xC	434 Typ K2	PL50SIL
Luminus	CHM-6-BH / CXM-6-xC	434 Typ K2	PL50SIL
Luminus	CIM/CLM/CXM-9-xC	434 Typ K2	PL50SIL
Luminus	CLM/CXM-9-xA	461 Typ K2	PL50SIL
Luminus	CHM-9-BH	433 Typ K2	PL50SIL
Luminus	CXM-11-xC	433 Typ K2	PL50SIL
Luminus	CGM/CIM/CLM/CXM-14-xC	433 Typ K2	PL50SIL
Luminus	CDM-6 / CDM-9Gen1 DtW	490 Typ K2	PL50SIL
Luminus	CTM-6 / CTM-9 TW	495 Typ K2	PL50SIL
Luxtech	COB-WD-10-1512	479 Typ K2	PL50SIL
Nichia	NV..S007Z / NF..T012B	452 Typ K2	PL50SIL
Nichia	NF..S024B / NT..S024B	452 Typ K2	PL50SIL
Nichia	NJ..S024Z	452 Typ K2	PL50SIL
Nichia	NV..L016Z / NV..L024Z	438 Typ K2	PL50SIL
Nichia	NF..L036B / NF..L048B	438 Typ K2	PL50SIL
Nichia	NF..L060B	438 Typ K2	PL50SIL
Nichia	NJNWS012Z Tunable	495 Typ K2 HV	PL50SIL
Nichia	NJCWL024Z Tunable	497 Typ K2 HV	PL50SIL
Philips	Fortimo SLM12xx .. 1215 G7	452 Typ K2	PL50SIL
Philips	Fortimo SLM12xx .. 1619 G7	480 Typ K2	PL50SIL
Philips	Fortimo SLM12xx .. 1313 G7N	434 Typ K2	PL50SIL
Philips	Fortimo SLM12xx .. 1919 G7N	433 Typ K2	PL50SIL
Philips	Fortimo L06A 1313 G7N Tunable	509 Typ K2	PL50SIL
Philips	Fortimo L09A 1919 G7N Tunable	501 Typ K2	PL50SIL

Mögliche Halter / COB Kombinationen / Holder / COB combinations Khatod PL50SIL

COB Hersteller COB Supplier	COB Typ COB Type	Halter Holder	Linse Lense
Prolight Opto	PASB	434 Typ K2	PL50SIL
Prolight Opto	PASQ/PAPQ DimToWarm	434 Typ K2	PL50SIL
Prolight Opto	PDSQ DimToWarm	490 Typ K2	PL50SIL
Samsung	LC 010C	434 Typ K2	PL50SIL
Samsung	LC 020C / 030C / 040C	477 Typ K2	PL50SIL
Samsung	LC 003D / 006D	434 Typ K2	PL50SIL
Samsung	LC 009D / 013D	434 Typ K2	PL50SIL
Samsung	LC 016D / 019D	477 Typ K2	PL50SIL
Samsung	LC 026D / 033D	477 Typ K2	PL50SIL
Samsung	LC010T Tunable	501 Typ K2	PL50SIL
Samsung	LC020T Tunable	501 Typ K2	PL50SIL
Seoul	SAW* 0661	434 Typ K2	PL50SIL
Seoul	SAW* 1062 / 1063	434 Typ K2	PL50SIL
Seoul	SAW* 1564 / 1565 / 1566	477 Typ K2	PL50SIL
Tridonic	SLE ADV8 LES 04 / 06	434 Typ K2	PL50SIL
Tridonic	SLE ADV8 LES 09	434 Typ K2	PL50SIL
Tridonic	SLE ADV8 LES 13	433 Typ K2	PL50SIL
Tridonic	SLE ADV8 LES 15	433 Typ K2	PL50SIL
Tridonic	SLE SNC8 LES 06	434 Typ K2	PL50SIL
Tridonic	SLE SNC8 LES 09	434 Typ K2	PL50SIL
Tridonic	SLE SNC8 LES 15	433 Typ K2	PL50SIL
VS Lighting	DMS 102 ***W	434 Typ K2	PL50SIL
VS Lighting	DMS 124 ***W	434 Typ K2	PL50SIL
VS Lighting	DMS 125 / 126 / 128 ***W	433 Typ K2	PL50SIL
VS Lighting	DMS 1208J	433 Typ K2	PL50SIL
VS Lighting	VCA 042	486 Typ K2	PL50SIL
VS Lighting	VCA2 122 / 123 / 124	486 Typ K2	PL50SIL
VS Lighting	VCA2 126 / 128	477 Typ K2	PL50SIL
VS Lighting	TW 1914 Tunable	493 Typ K2	PL50SIL
VS Lighting	WU-M-618 DimToWarm	434 Typ K2	PL50SIL
Xicato	XOB 04	486 Typ K2	PL50SIL

Mögliche Halter / COB Kombinationen / Holder / COB combinations **Khatod PL50SIL**

COB Hersteller COB Supplier	COB Typ COB Type	Halter Holder	Linse Lense
Xicato	XOB 06 (B)	486 Typ K2	PL50SIL
Xicato	XOB 09	434 Typ K2	PL50SIL
Xicato	XOB 14	433 Typ K2	PL50SIL

KHATOD® Optical Solutions for LED Lighting

SiO3
SiO3 Junior

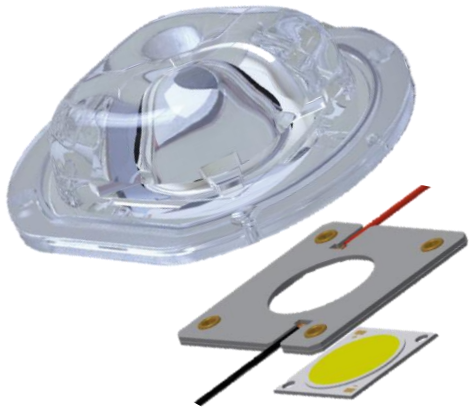

Khatod Linse
Khatod lense

Khatod partnumbers

Hersteller Webseite
Manufacturer website

www.khatod.com

LED Halter B+W
LED Holder B+W

4xx / Typ K1

4xx Typ K1

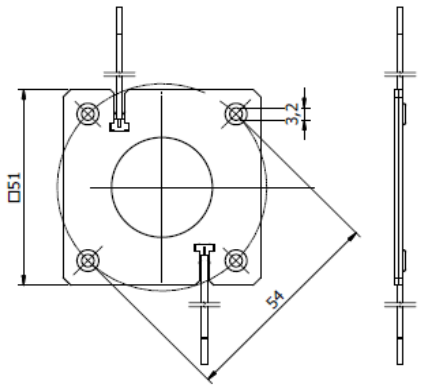

Mögliche Halter / COB Kombinationen / Holder / COB combinations **Khatod SiO3**

COB Hersteller COB Supplier	COB Typ COB Type	LES LES	Halter Holder	Linse Lense
Bridgelux	V9 HD / V11 HD Gen 7,8	9 mm	496 Typ K1	see Khatod website
Bridgelux	V10 Gen 7,8,9	10 mm	486 Typ K1	see Khatod website
Bridgelux	V13 Gen 7,8,9	15 mm	477 Typ K1	see Khatod website
Bridgelux	V15 Gen 7,8,9	15 mm	456 Typ K1	see Khatod website
Bridgelux	V18 Gen 7,8,9	20 mm	462 Typ K1	see Khatod website
Bridgelux	V22 Gen 7,8,9	23 mm	431 Typ K1	see Khatod website
Bridgelux	Vesta DTW 6/9mm Gen 1,2	9 mm	490 Typ K1	see Khatod website
Bridgelux	Vesta DTW 13/15mm Gen 1,2	16 mm	491 Typ K1	see Khatod website
Bridgelux	Vesta DTW 18mm Gen 1	18 mm	505 Typ K1	see Khatod website
Bridgelux	Vesta DTW 29mm Gen 1	29 mm	506 Typ K1	see Khatod website
Bridgelux	Vesta Tunable 9mm Gen 2	10 mm	489 Typ K1	see Khatod website
Bridgelux	Vesta Tunable 13mm Gen 2	15 mm	492 Typ K1	see Khatod website

Mögliche Halter / COB Kombinationen / Holder / COB combinations Khatod SiO3

COB Hersteller COB Supplier	COB Typ COB Type	LES LES	Halter Holder	Linse Lense
Bridgelux	Vesta Tunable 15mm Gen 2	16 mm	482 Typ K1	see Khatod website
Bridgelux	Vesta Tunable 18mm Gen 2	20 mm	483 Typ K1	see Khatod website
Bridgelux	Vesta Tunable 22mm Gen 2	23 mm	494 Typ K1	see Khatod website
Bridgelux	Vesta Tunable 29mm Gen 2	30 mm	503 Typ K1	see Khatod website
Citizen	CLU 028 / 02J / 02Q	10 mm	434 Typ K1	see Khatod website
Citizen	CLU 038 / 03H / 03J / 03Q	15 mm	433 Typ K1	see Khatod website
Citizen	CLU 048 / 04H / 04J / 04Q	22 mm	431 Typ K1	see Khatod website
Citizen	CLU 723	11 mm	477 Typ K1	see Khatod website
Citizen	CLU 733	13 mm	471 Typ K1	see Khatod website
Citizen	LCN-C01B2 / C02B2 Tunable	15 mm	481 Typ K1	see Khatod website
Citizen	LCN-C04B2 / C05B2 Tunable	15 mm	481 Typ K1	see Khatod website
CREE	CMA 1516	9 mm	441 Typ K1	see Khatod website
CREE	CMA 1825 / 1840	14 mm	437 Typ K1	see Khatod website
CREE	CMA 2550	19 mm	439 Typ K1	see Khatod website
CREE	CMA 3090	23 mm	447 Typ K1	see Khatod website
CREE	CMB 1507 / 1510 / 1516	9 mm	441 Typ K1	see Khatod website
CREE	CMB 1818 / 1825	12 mm	437 Typ K1	see Khatod website
CREE	CMB 1840	14 mm	457 Typ K1	see Khatod website
CREE	CMB 2550	19 mm	439 Typ K1	see Khatod website
CREE	CMB 3090	23 mm	447 Typ K1	see Khatod website
CREE	CMT 1407 / 1412 / 1420	10 mm	434 Typ K1	see Khatod website
CREE	CMT 1922 / 1925 / 1930 / 1945	15 mm	477 Typ K1	see Khatod website
CREE	CMT 2850 / 2870 / 2890	22 mm	471 Typ K1	see Khatod website
CREE	CMU 1003 / 1006 / 1010 / 1013	10 mm	434 Typ K1	see Khatod website
CREE	CMU 1516 / 1519 / 1526 / 1532	15 mm	433 Typ K1	see Khatod website
CREE	CMU 2236 / 2239 / 2258 / 2287	22 mm	471 Typ K1	see Khatod website
CREE	CXB 1507 / 1512 / 1520	9 mm	441 Typ K1	see Khatod website
CREE	CXB 1816 / 1820	12 mm	437 Typ K1	see Khatod website
CREE	CXB 1830	14 mm	457 Typ K1	see Khatod website
CREE	CXB 2530 / 2540	19 mm	439 Typ K1	see Khatod website
CREE	CXB 3050 / 3070	23 mm	447 Typ K1	see Khatod website
CREE	CXB 3590	30 mm	449 Typ K1	see Khatod website
Edison	2PHE 03 / 06 / 09 / 13	10 mm	434 Typ K1	see Khatod website
Edison	2PHE 15 / 18 / 24 / 30	16 mm	433 Typ K1	see Khatod website

Mögliche Halter / COB Kombinationen / Holder / COB combinations Khatod SiO3

COB Hersteller COB Supplier	COB Typ COB Type	LES LES	Halter Holder	Linse Lense
Edison	2PHE 55 / 60 / 83	23 mm	431 Typ K1	see Khatod website
Lextar	PB 06 / 09 / 13	10 mm	434 Typ K1	see Khatod website
Lextar	PB 16 / 19 / 26	15 mm	433 Typ K1	see Khatod website
Lextar	PB 38 / 54	22 mm	431 Typ K1	see Khatod website
Lumileds	Luxeon 1202 / 1203 / 1204HD	9 mm	480 Typ K1	see Khatod website
Lumileds	Luxeon 1205HD	11 mm	480 Typ K1	see Khatod website
Lumileds	Luxeon 1204 / 1205	13 mm	432 Typ K1	see Khatod website
Lumileds	Luxeon 1208 / 1210	15 mm	432 Typ K1	see Khatod website
Lumileds	Luxeon 1211	19 mm	431 Typ K1	see Khatod website
Lumileds	Luxeon 1213 / 1216 / 1812 / 1816	23 mm	431 Typ K1	see Khatod website
Lumileds	CS COB L02 / L04	10 mm	434 Typ K1	see Khatod website
Lumileds	CS COB L06 / L08 / L10	15 mm	433 Typ K1	see Khatod website
Lumileds	CS COB L11 / L13 / L16	22 mm	431 Typ K1	see Khatod website
Lumileds	CS COB R12 / R18	22 mm	431 Typ K1	see Khatod website
Lumileds	CX Plus HD S04H9	9 mm	4xx Typ K1	see Khatod website
Lumileds	CX Plus M02Fx / M03Fx	9 mm	441 Typ K1	see Khatod website
Lumileds	CX Plus L04Fx / L05Fx / L08Fx	14 mm	437 Typ K1	see Khatod website
Luminus	CIM/CLM/CXM-9-xC	9 mm	434 Typ K1	see Khatod website
Luminus	CLM/CXM-9-xA	10 mm	461 Typ K1	see Khatod website
Luminus	CHM-9-BH	9 mm	433 Typ K1	see Khatod website
Luminus	CXM-11-xC	12 mm	433 Typ K1	see Khatod website
Luminus	CGM/CIM/CLM/CXM-14-xC	15 mm	433 Typ K1	see Khatod website
Luminus	CVM/CXM-18	18 mm	453 Typ K1	see Khatod website
Luminus	CXM-18 Gen6	18 mm	431 Typ K1	see Khatod website
Luminus	CGM/CIM/CLM/CXM-22-xC	22 mm	431 Typ K1	see Khatod website
Luminus	CVM/CXM-27	27 mm	454 Typ K1	see Khatod website
Luminus	CDM-6 / CDM-9Gen1 DtW	10 mm	490 Typ K1	see Khatod website
Luminus	CDM-9 Gen2 DtW	9 mm	491 Typ K1	see Khatod website
Luminus	CDM-14/CDM-18 DtW	17 mm	491 Typ K1	see Khatod website
Luminus	CTM-6 / CTM-9 TW	10 mm	495 Typ K1	see Khatod website
Luminus	CTM-14 TW	18 mm	442 Typ K1	see Khatod website
Luminus	CTM-14 RGBW	14 mm	500 Typ K1	see Khatod website
Luminus	CTM-18 Gen1 TW	18 mm	442 Typ K1	see Khatod website
Luminus	CTM-18 Gen2 TW	20 mm	483 Typ K1	see Khatod website

Mögliche Halter / COB Kombinationen / Holder / COB combinations Khatod SiO3

COB Hersteller COB Supplier	COB Typ COB Type	LES LES	Halter Holder	Linse Lense
Luminus	CTM-22 TW	22 mm	494 Typ K1	see Khatod website
Luxtech	COB-WD-17-2420	15 mm	491 Typ K1	see Khatod website
Luxtech	COB-DN-16-2420	15 mm	442 Typ K1	see Khatod website
Nichia	NV..L016Z / NV..L024Z	9 mm	438 Typ K1	see Khatod website
Nichia	NF..L036B / NF..L048B	12 mm	438 Typ K1	see Khatod website
Nichia	NF..L060B	12 mm	438 Typ K1	see Khatod website
Nichia	NV..J048Z / NF..J108B	15 mm	463 Typ K1	see Khatod website
Nichia	NF..J130B	15 mm	463 Typ K1	see Khatod website
Nichia	NVCWJ024Z Tunable	11 mm	498 Typ K1 HV	see Khatod website
Philips	Fortimo SLM12xx .. 1619 G7	9 mm	480 Typ K1	see Khatod website
Philips	Fortimo SLM12xx .. 2024 G7	15 mm	432 Typ K1	see Khatod website
Philips	Fortimo SLM12xx .. 2828 G7	23 mm	431 Typ K1	see Khatod website
Philips	Fortimo SLM12xx .. 1313 G7N	10 mm	434 Typ K1	see Khatod website
Philips	Fortimo SLM12xx .. 1919 G7N	15 mm	433 Typ K1	see Khatod website
Philips	Fortimo SLM12xx .. 2828 G7N	22 mm	431 Typ K1	see Khatod website
Philips	Fortimo SLM13xx .. 2024 G8 UHE	15 mm	432 Typ K1	see Khatod website
Philips	Fortimo SLM13xx .. 2828 G8 UHE	23 mm	431 Typ K1	see Khatod website
Philips	Fortimo L09A 1919 G7N Tunable	9 mm	501 Typ K1	see Khatod website
Prolight Opto	PASB	10 mm	434 Typ K1	see Khatod website
Prolight Opto	PASQ/PAPQ DimToWarm	10 mm	434 Typ K1	see Khatod website
Prolight Opto	PDSR DimToWarm	15 mm	432 Typ K1	see Khatod website
Prolight Opto	PDSJ Tunable	15 mm	442 Typ K1	see Khatod website
Samsung	LC 020C / 030C / 040C	12 mm	477 Typ K1	see Khatod website
Samsung	LC 003D / 006D	10 mm	434 Typ K1	see Khatod website
Samsung	LC 009D / 013D	10 mm	434 Typ K1	see Khatod website
Samsung	LC 016D / 019D	16 mm	477 Typ K1	see Khatod website
Samsung	LC 026D / 033D	16 mm	477 Typ K1	see Khatod website
Samsung	LC 040D / 060D / 080D	23 mm	431 Typ K1	see Khatod website
Samsung	LC010T Tunable	10 mm	501 Typ K1	see Khatod website
Samsung	LC020T Tunable	13 mm	501 Typ K1	see Khatod website
Samsung	LC035T Tunable	22 mm	502 Typ K1	see Khatod website

Mögliche Halter / COB Kombinationen / Holder / COB combinations Khatod SiO3

COB Hersteller COB Supplier	COB Typ COB Type	LES LES	Halter Holder	Linse Lense
Seoul	SAW* 1062 / 1063	10 mm	434 Typ K1	see Khatod website
Seoul	SAW* 1564 / 1565 / 1566	15 mm	477 Typ K1	see Khatod website
Seoul	SAW* 22AA / 2296	22 mm	431 Typ K1	see Khatod website
Seoul	SAW* 2298 / 226A	22 mm	431 Typ K1	see Khatod website
Tridonic	SLE ADV8 LES 04 / 06	9 mm	434 Typ K1	see Khatod website
Tridonic	SLE ADV8 LES 09	9 mm	434 Typ K1	see Khatod website
Tridonic	SLE ADV8 LES 13	13 mm	433 Typ K1	see Khatod website
Tridonic	SLE ADV8 LES 15	15 mm	433 Typ K1	see Khatod website
Tridonic	SLE ADV8 LES 17	17 mm	431 Typ K1	see Khatod website
Tridonic	SLE ADV8 LES 21	21 mm	431 Typ K1	see Khatod website
Tridonic	SLE SNC8 LES 09	10 mm	434 Typ K1	see Khatod website
Tridonic	SLE SNC8 LES 15	15 mm	433 Typ K1	see Khatod website
VS Lighting	DMS 124 ***W	9 mm	434 Typ K1	see Khatod website
VS Lighting	DMS 125 / 126 / 128 ***W	14 mm	433 Typ K1	see Khatod website
VS Lighting	DMS 120 ***W	17 mm	431 Typ K1	see Khatod website
VS Lighting	DMS 12C / 18B ***W	20 mm	431 Typ K1	see Khatod website
VS Lighting	DMS 1208J	15 mm	433 Typ K1	see Khatod website
VS Lighting	DMS 1212J / 1812J	22 mm	431 Typ K1	see Khatod website
VS Lighting	VCA2 122 / 123 / 124	9 mm	486 Typ K1	see Khatod website
VS Lighting	VCA2 126 / 128	14 mm	477 Typ K1	see Khatod website
VS Lighting	VCA2 1211 / 1213	20 mm	471 Typ K1	see Khatod website
VS Lighting	TW 1914 Tunable	14 mm	493 Typ K1	see Khatod website
VS Lighting	TW 2820 Tunable	20 mm	494 Typ K1	see Khatod website
VS Lighting	WU-M-618 DimToWarm	10 mm	434 Typ K1	see Khatod website
Xicato	XOB 09	10 mm	434 Typ K1	see Khatod website
Xicato	XOB 14	15 mm	433 Typ K1	see Khatod website
Xicato	XOB 23	23 mm	431 Typ K1	see Khatod website

KHATOD® Optical Solutions for LED Lighting

SIR50 Silicone Lense

Khatod Linse
Khatod lense — SIR50

Hersteller Webseite
Manufacturer website — www.khatod.com

LED Halter B+W
LED Holder B+W — 4xx / Typ K3

4xx Typ K3

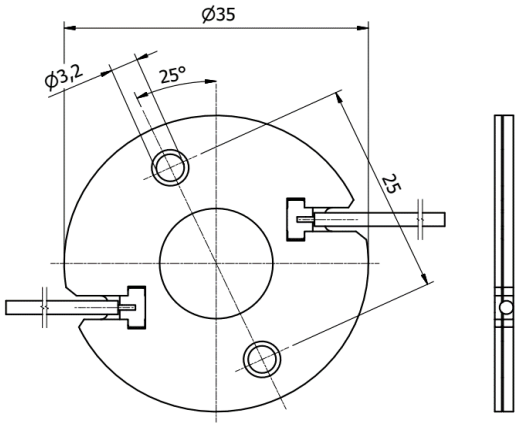

SIR50

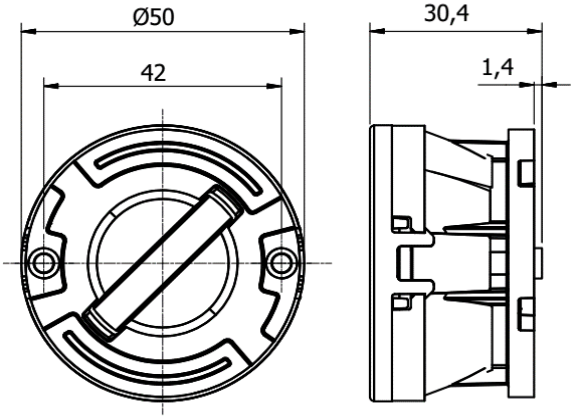

Mögliche Halter / COB Kombinationen / Holder / COB combinations — Khatod SIR50

COB Hersteller COB Supplier	COB Typ COB Type	Halter Holder	Linse Lense
Bridgelux	V3 HD / V4 HD Gen 7,8	460 Typ K3	KEPLL1994…
Bridgelux	V6 HD Gen 7,8	464 Typ K3	KEPLL1994…
Bridgelux	V9 HD / V11 HD Gen 7,8	496 Typ K3	KEPLL1994…
Bridgelux	V6 Gen 8,9 (just 2 pads!)	460 Typ K3	KEPLL1994…
Bridgelux	V8 Gen 7,8,9 (4 pads)	460 Typ K3	KEPLL1994…
Bridgelux	Vesta DTW 6/9mm Gen 1,2	490 Typ K3	KEPLL1994…
Bridgelux	Vesta Tunable 6mm Gen 2	504 Typ K3	KEPLL1994…
Bridgelux	Vesta Tunable 9mm Gen 2	489 Typ K3	KEPLL1994…
Citizen	CLU 028 / 02J / 02Q	434 Typ K3	KEPLL1994…
Citizen	CLU 702 / 703 / 7A2 /7A3 / 7B2	434 Typ K3	KEPLL1994…
Citizen	CLU 712 / 713	477 Typ K3	KEPLL1994…

Mögliche Halter / COB Kombinationen / Holder / COB combinations Khatod SIR50

COB Hersteller COB Supplier	COB Typ COB Type	Halter Holder	Linse Lense
CREE	CHA 0825	433 Typ K3	KEPLL1994…
CREE	CMA 1303 / 1306	448 Typ K3	KEPLL1994…
CREE	CMA 1516	441 Typ K3	KEPLL1994…
CREE	CMB 1304 / 1306	448 Typ K3	KEPLL1994…
CREE	CMB 1507 / 1510 / 1516	441 Typ K3	KEPLL1994…
CREE	CMT 1407 / 1412 / 1420	434 Typ K3	KEPLL1994…
CREE	CMU 1003 / 1006 / 1010 / 1013	434 Typ K3	KEPLL1994…
CREE	CXB 1304 / 1310	448 Typ K3	KEPLL1994…
CREE	CXB 1507 / 1512 / 1520	441 Typ K3	KEPLL1994…
Edison	2PHE 03 / 06 / 09 / 13	434 Typ K3	KEPLL1994…
Lextar	PB 06 / 09 / 13	434 Typ K3	KEPLL1994…
Lumileds	Luxeon 1202s / 1202HD	452 Typ K3	KEPLL1994…
Lumileds	Luxeon 1202 / 1203 / 1204HD	480 Typ K3	KEPLL1994…
Lumileds	CS COB L02 / L04	434 Typ K3	KEPLL1994…
Lumileds	CX Plus HD S01H4, S0xH6	448 Typ K3	KEPLL1994…
Lumileds	CX Plus HD S04H9	4xx Typ K3	KEPLL1994…
Lumileds	CX Plus M02Fx / M03Fx	441 Typ K3	KEPLL1994…
Luminus	CHM-6-BH / CXM-6-xC	434 Typ K3	KEPLL1994…
Luminus	CIM/CLM/CXM-9-xC	434 Typ K3	KEPLL1994…
Luminus	CLM/CXM-9-xA	461 Typ K3	KEPLL1994…
Luminus	CHM-9-BH	433 Typ K3	KEPLL1994…
Luminus	CDM-6 / CDM-9Gen1 DtW	490 Typ K3	KEPLL1994…
Luminus	CTM-6 / CTM-9 TW	495 Typ K3	KEPLL1994…
Luxtech	COB-WD-10-1512	479 Typ K3	KEPLL1994…
Nichia	NV..S007Z / NF..T012B	452 Typ K3	KEPLL1994…
Nichia	NF..S024B / NT..S024B	452 Typ K3	KEPLL1994…
Nichia	NJ..S024Z	452 Typ K3	KEPLL1994…
Nichia	NV..L016Z / NV..L024Z	438 Typ K3	KEPLL1994…
Nichia	NJNWS012Z Tunable	495 Typ K3 HV	KEPLL1994…
Nichia	NJCWL024Z Tunable	497 Typ K3 HV	KEPLL1994…

Mögliche Halter / COB Kombinationen / Holder / COB combinations Khatod SIR50

COB Hersteller COB Supplier	COB Typ COB Type	Halter Holder	Linse Lense
Philips	Fortimo SLM12xx .. 1215 G7	452 Typ K3	KEPLL1994…
Philips	Fortimo SLM12xx .. 1619 G7	480 Typ K3	KEPLL1994…
Philips	Fortimo SLM12xx .. 1313 G7N	434 Typ K3	KEPLL1994…
Philips	Fortimo L06A 1313 G7N Tunable	509 Typ K3	KEPLL1994…
Philips	Fortimo L09A 1919 G7N Tunable	501 Typ K3	KEPLL1994…
Prolight Opto	PASB	434 Typ K3	KEPLL1994…
Prolight Opto	PASQ/PAPQ DimToWarm	434 Typ K3	KEPLL1994…
Prolight Opto	PDSQ DimToWarm	490 Typ K3	KEPLL1994…
Samsung	LC 010C	434 Typ K3	KEPLL1994…
Samsung	LC 003D / 006D	434 Typ K3	KEPLL1994…
Samsung	LC 009D / 013D	434 Typ K3	KEPLL1994…
Samsung	LC010T Tunable	501 Typ K3	KEPLL1994…
Seoul	SAW* 0661	434 Typ K3	KEPLL1994…
Seoul	SAW* 1062 / 1063	434 Typ K3	KEPLL1994…
Tridonic	SLE ADV8 LES 04 / 06	434 Typ K3	KEPLL1994…
Tridonic	SLE ADV8 LES 09	434 Typ K3	KEPLL1994…
Tridonic	SLE SNC8 LES 06	434 Typ K3	KEPLL1994…
Tridonic	SLE SNC8 LES 09	434 Typ K3	KEPLL1994…
VS Lighting	DMS 102 ***W	434 Typ K3	KEPLL1994…
VS Lighting	DMS 124 ***W	434 Typ K3	KEPLL1994…
VS Lighting	VCA2 122 / 123 / 124	486 Typ K3	KEPLL1994…
VS Lighting	WU-M-618 DimToWarm	434 Typ K3	KEPLL1994…
Xicato	XOB 06 (B)	486 Typ K3	KEPLL1994…
Xicato	XOB 09	434 Typ K3	KEPLL1994…

Zhaga

Buch 3 kompatibler Halter
Book 3 compatible holder

Zhaga Webseite Zhaga website	www.zhagastandard.org	**Zertifikate / certificates**
LED Halter B+W LED Holder B+W	4xx / Typ Z1	**Ausweis-Nr.** 40041342 **File** E47294

Unsere Halter 4xx Typ Z1 entsprechen mit dem Aussendurchmesser und den Befestigungspunkten den Vorgaben von Zhaga Buch 3, aber durch die extrem flache Bauweise können sie nicht zertifziert werden.

The shape and fixing points holders of our holders 4xx Type Z1 are compatible to Zhaga Book 3, but due to the thin design they cannot be certified.

4xx / Typ Z1

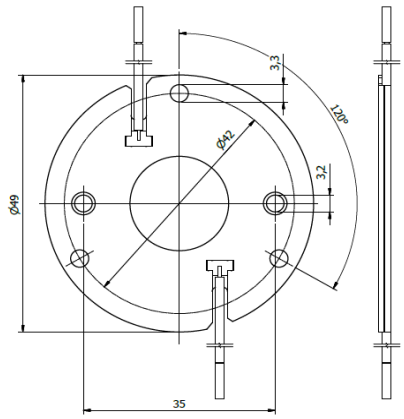

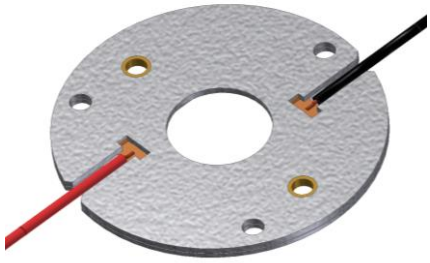

verfügbare Halter / available Holder

COB Hersteller COB Supplier	COB Typ COB Type	Halter Holder
Bridgelux	**V3 HD / V4 HD Gen 7,8**	**460 Typ Z1**
Bridgelux	**V6 HD Gen 7,8**	**464 Typ Z1**
Bridgelux	**V9 HD / V11 HD Gen 7,8**	**496 Typ Z1**
Bridgelux	**V6 Gen 8,9 (just 2 pads!)**	**460 Typ Z1**
Bridgelux	**V8 Gen 7,8,9 (4 pads)**	**460 Typ Z1**
Bridgelux	**V10 Gen 7,8,9**	**486 Typ Z1**
Bridgelux	**V13 Gen 7,8,9**	**477 Typ Z1**
Bridgelux	**V15 Gen 7,8,9**	**456 Typ Z1**
Bridgelux	**V18 Gen 7,8,9**	**462 Typ Z1**
Bridgelux	**V22 Gen 7,8,9**	**431 Typ Z1**
Bridgelux	**Vesta DTW 6/9mm Gen 1,2**	**490 Typ Z1**

verfügbare Halter / available Holder

COB Hersteller COB Supplier	COB Typ COB Type	Halter Holder
Bridgelux	Vesta DTW 13/15mm Gen 1,2	491 Typ Z1
Bridgelux	Vesta DTW 18mm Gen 1	505 Typ Z1
Bridgelux	Vesta Tunable 6mm Gen 2	504 Typ Z1
Bridgelux	Vesta Tunable 9mm Gen 2	489 Typ Z1
Bridgelux	Vesta Tunable 13mm Gen 2	492 Typ Z1
Bridgelux	Vesta Tunable 15mm Gen 2	482 Typ Z1
Bridgelux	Vesta Tunable 18mm Gen 2	483 Typ Z1
Bridgelux	Vesta Tunable 22mm Gen 2	494 Typ Z1
Citizen	CLU 028 / 02J / 02Q	434 Typ Z1
Citizen	CLU 038 / 03H / 03J / 03Q	433 Typ Z1
Citizen	CLU 048 / 04H / 04J / 04Q	431 Typ Z1
Citizen	CLU 702 / 703 / 7A2 /7A3 / 7B2	434 Typ Z1
Citizen	CLU 712 / 713	477 Typ Z1
Citizen	CLU 723	477 Typ Z1
Citizen	CLU 733	471 Typ Z1
Citizen	LCN-C01B2 / C02B2 Tunable	481 Typ Z1
Citizen	LCN-C04B2 / C05B2 Tunable	481 Typ Z1
CREE	CHA 0825	433 Typ Z1
CREE	CMA 1303 / 1306	448 Typ Z1
CREE	CMA 1516	441 Typ Z1
CREE	CMA 1825 / 1840	437 Typ Z1
CREE	CMA 2550	439 Typ Z1
CREE	CMA 3090	447 Typ Z1
CREE	CMB 1304 / 1306	448 Typ Z1
CREE	CMB 1507 / 1510 / 1516	441 Typ Z1
CREE	CMB 1818 / 1825	437 Typ Z1
CREE	CMB 1840	457 Typ Z1
CREE	CMB 2550	439 Typ Z1
CREE	CMB 3090	447 Typ Z1
CREE	CMT 1407 / 1412 / 1420	434 Typ Z1
CREE	CMT 1922 / 1925 / 1930 / 1945	477 Typ Z1
CREE	CMT 2850 / 2870 / 2890	471 Typ Z1
CREE	CMU 1003 / 1006 / 1010 / 1013	434 Typ Z1
CREE	CMU 1516 / 1519 / 1526 / 1532	433 Typ Z1
CREE	CMU 2236 / 2239 / 2258 / 2287	471 Typ Z1

verfügbare Halter / available Holder

COB Hersteller COB Supplier	COB Typ COB Type	Halter Holder
CREE	CXB 1304 / 1310	448 Typ Z1
CREE	CXB 1507 / 1512 / 1520	441 Typ Z1
CREE	CXB 1816 / 1820	437 Typ Z1
CREE	CXB 1830	457 Typ Z1
CREE	CXB 2530 / 2540	439 Typ Z1
CREE	CXB 3050 / 3070	447 Typ Z1
Edison	2PHE 03 / 06 / 09 / 13	434 Typ Z1
Edison	2PHE 15 / 18 / 24 / 30	433 Typ Z1
Edison	2PHE 55 / 60 / 83	431 Typ Z1
Lextar	PB 06 / 09 / 13	434 Typ Z1
Lextar	PB 16 / 19 / 26	433 Typ Z1
Lextar	PB 38 / 54	431 Typ Z1
Lumileds	Luxeon 1202s / 1202HD	452 Typ Z1
Lumileds	Luxeon 1202 / 1203 / 1204HD	480 Typ Z1
Lumileds	Luxeon 1205HD	480 Typ Z1
Lumileds	Luxeon 1204 / 1205	432 Typ Z1
Lumileds	Luxeon 1208 / 1210	432 Typ Z1
Lumileds	Luxeon 1211	431 Typ Z1
Lumileds	Luxeon 1213 / 1216 / 1812 / 1816	431 Typ Z1
Lumileds	CS COB L02 / L04	434 Typ Z1
Lumileds	CS COB L06 / L08 / L10	433 Typ Z1
Lumileds	CS COB L11 / L13 / L16	431 Typ Z1
Lumileds	CS COB R12 / R18	431 Typ Z1
Lumileds	CX Plus HD S01H4, S0xH6	448 Typ Z1
Lumileds	CX Plus HD S04H9	4xx Typ Z1
Lumileds	CX Plus S01Fx / S02Fx	448 Typ Z1
Lumileds	CX Plus M02Fx / M03Fx	441 Typ Z1
Lumileds	CX Plus L04Fx / L05Fx / L08Fx	437 Typ Z1
Luminus	CHM-4-BH / CXM-4-xC	434 Typ Z1
Luminus	CHM-6-BH / CXM-6-xC	434 Typ Z1
Luminus	CIM/CLM/CXM-9-xC	434 Typ Z1
Luminus	CLM/CXM-9-xA	461 Typ Z1
Luminus	CHM-9-BH	433 Typ Z1

verfügbare Halter / available Holder

COB Hersteller COB Supplier	COB Typ COB Type	Halter Holder
Luminus	CXM-11-xC	433 Typ Z1
Luminus	CGM/CIM/CLM/CXM-14-xC	433 Typ Z1
Luminus	CVM/CXM-18	453 Typ Z1
Luminus	CXM-18 Gen6	431 Typ Z1
Luminus	CGM/CIM/CLM/CXM-22-xC	431 Typ Z1
Luminus	CDM-6 / CDM-9Gen1 DtW	490 Typ Z1
Luminus	CDM-9 Gen2 DtW	491 Typ Z1
Luminus	CDM-14/CDM-18 DtW	491 Typ Z1
Luminus	CTM-6 / CTM-9 TW	495 Typ Z1
Luminus	CTM-14 TW	442 Typ Z1
Luminus	CTM-14 RGBW	500 Typ Z1
Luminus	CTM-18 Gen1 TW	442 Typ Z1
Luminus	CTM-18 Gen2 TW	483 Typ Z1
Luminus	CTM-22 TW	494 Typ Z1
Luxtech	COB-WD-10-1512	479 Typ Z1
Luxtech	COB-WD-17-2420	491 Typ Z1
Luxtech	COB-DN-16-2420	442 Typ Z1
Nichia	NV..S007Z / NF..T012B	452 Typ Z1
Nichia	NF..S024B / NT..S024B	452 Typ Z1
Nichia	NJ..S024Z	452 Typ Z1
Nichia	NV..L016Z / NV..L024Z	438 Typ Z1
Nichia	NF..L036B / NF..L048B	438 Typ Z1
Nichia	NF..L060B	438 Typ Z1
Nichia	NV..J048Z / NF..J108B	463 Typ Z1
Nichia	NF..J130B	463 Typ Z1
Nichia	NJNWS012Z Tunable	495 Typ Z1 HV
Nichia	NJCWL024Z Tunable	497 Typ Z1 HV
Nichia	NVCWJ024Z Tunable	498 Typ Z1 HV
Philips	Fortimo SLM12xx .. 1215 G7	452 Typ Z1
Philips	Fortimo SLM12xx .. 1619 G7	480 Typ Z1
Philips	Fortimo SLM12xx .. 2024 G7	432 Typ Z1
Philips	Fortimo SLM12xx .. 2828 G7	431 Typ Z1
Philips	Fortimo SLM12xx .. 1313 G7N	434 Typ Z1
Philips	Fortimo SLM12xx .. 1919 G7N	433 Typ Z1

verfügbare Halter / available Holder

COB Hersteller COB Supplier	COB Typ COB Type	Halter Holder
Philips	Fortimo SLM12xx .. 2828 G7N	431 Typ Z1
Philips	Fortimo SLM13xx .. 2024 G8 UHE	432 Typ Z1
Philips	Fortimo SLM13xx .. 2828 G8 UHE	431 Typ Z1
Philips	Fortimo L06A 1313 G7N Tunable	509 Typ Z1
Philips	Fortimo L09A 1919 G7N Tunable	501 Typ Z1
Prolight Opto	PASB	434 Typ Z1
Prolight Opto	PASQ/PAPQ DimToWarm	434 Typ Z1
Prolight Opto	PDSQ DimToWarm	490 Typ Z1
Prolight Opto	PDSR DimToWarm	432 Typ Z1
Prolight Opto	PDSJ Tunable	442 Typ Z1
Samsung	LC 010C	434 Typ Z1
Samsung	LC 020C / 030C / 040C	477 Typ Z1
Samsung	LC 003D / 006D	434 Typ Z1
Samsung	LC 009D / 013D	434 Typ Z1
Samsung	LC 016D / 019D	477 Typ Z1
Samsung	LC 026D / 033D	477 Typ Z1
Samsung	LC 040D / 060D / 080D	431 Typ Z1
Samsung	LC010T Tunable	501 Typ Z1
Samsung	LC020T Tunable	501 Typ Z1
Samsung	LC035T Tunable	502 Typ Z1
Seoul	SAW* 0661	434 Typ Z1
Seoul	SAW* 1062 / 1063	434 Typ Z1
Seoul	SAW* 1564 / 1565 / 1566	477 Typ Z1
Seoul	SAW* 22AA / 2296	431 Typ Z1
Seoul	SAW* 2298 / 226A	431 Typ Z1
Tridonic	SLE ADV8 LES 04 / 06	434 Typ Z1
Tridonic	SLE ADV8 LES 09	434 Typ Z1
Tridonic	SLE ADV8 LES 13	433 Typ Z1
Tridonic	SLE ADV8 LES 15	433 Typ Z1
Tridonic	SLE SNC8 LES 06	434 Typ Z1
Tridonic	SLE SNC8 LES 09	434 Typ Z1
Tridonic	SLE SNC8 LES 15	433 Typ Z1

verfügbare Halter / available Holder

COB Hersteller COB Supplier	COB Typ COB Type	Halter Holder
VS Lighting	DMS 102 ***W	434 Typ Z1
VS Lighting	DMS 124 ***W	434 Typ Z1
VS Lighting	DMS 125 / 126 / 128 ***W	433 Typ Z1
VS Lighting	DMS 120 ***W	431 Typ Z1
VS Lighting	DMS 12C / 18B ***W	431 Typ Z1
VS Lighting	DMS 1208J	433 Typ Z1
VS Lighting	DMS 1212J / 1812J	431 Typ Z1
VS Lighting	VCA 042	486 Typ Z1
VS Lighting	VCA2 122 / 123 / 124	486 Typ Z1
VS Lighting	VCA2 126 / 128	477 Typ Z1
VS Lighting	VCA2 1211 / 1213	471 Typ Z1
VS Lighting	TW 1914 Tunable	493 Typ Z1
VS Lighting	TW 2820 Tunable	494 Typ Z1
VS Lighting	WU-M-618 DimToWarm	434 Typ Z1
Xicato	XOB 04	486 Typ Z1
Xicato	XOB 06 (B)	486 Typ Z1
Xicato	XOB 09	434 Typ Z1
Xicato	XOB 14	433 Typ Z1
Xicato	XOB 23	431 Typ Z1

Wir helfen Ihnen gerne weiter.
Sprechen Sie uns einfach an!

Please don´t hesitate to contact us
for any further questions.

BENDER
+WIRTH

Ihr Kontakt:
Your contact:

Michael Kritzler
Head of Engineering
+49 (0) 2359 / 669 - 184
kritzler@bender-wirth.de

Bender + Wirth GmbH & Co.
D-58566 Kierspe, Germany
+49 (2359) / 669 - 0
sales@bender-wirth.de
www.bender-wirth.de